Model FSC 80 K-factor Flush Sprinkler, Pendent Quick Response, Standard Coverage

IMPORTANT

Refer to Technical Data Sheet TFP2300 for warnings pertaining to regulatory and health information.

Always refer to Technical Data Sheet TFP700 for the "INSTALLER WARNING" that provides cautions with respect to handling and installation of sprinkler systems and components. Improper handling and installation can permanently damage a sprinkler system or its components and cause the sprinkler to fail to operate in a fire situation or cause it to operate prematurely.

Scan the QR code or enter the URL in a web browser to access the most up-to-date electronic version of this document. Data rates may apply.

docs.jci.com/tycofire/tfp645

General Description

The TYCO Model FSC 80 K-factor Flush Sprinkler is a quick response standard coverage sprinkler designed for use in areas such as offices, hospitals, churches, schools, apartments, and hotels.

For applications in poured concrete ceiling/floor assemblies, a unique Installation Cup is used to form the recessed cavity into which the FSC Sprinkler is installed.

For suspended ceiling applications, a Dust Cap is used to protect the FSC Sprinkler above the ceiling panel.

The flush design is made aesthetically appealing by concealing the deflector and other operating parts above the link assembly. The FSC Sprinkler, with a heat sensitive solder type release element, is rated as a quick response sprinkler.

NOTICE

The TYCO Model FSC 80 K-factor Flush Sprinkler described herein must be installed and maintained in compliance with this document and with the applicable standards CEA 4001 "Sprinkler Systems: Planning and Installation" or EN12845 "Fixed Firefighting Systems - Automatic Sprinkler Systems - Design, Installation and Maintenance", in addition to the standards of any authorities having jurisdiction. Failure to do so may impair the performance of these devices.

Johnson Controls specifically disclaims any liability for damages or injury (including death) arising out of or caused by manipulation, dismantling, or misuse of the FSC Sprinkler or the use or attempted use of the FSC Sprinkler or any component thereof as an instrument unrelated to its intended function as a fire protection device.

The owner is responsible for maintaining their fire protection system and devices in proper operating condition. Contact the installing contractor or product manufacturer with any questions.



Sprinkler Identification Number (SIN)

TY3200

Technical Data

Approvals

VdS Approved
Model FSC Flush Sprinkler is VdS approved for installation per CEA 4001 "Sprinkler Systems: Planning and Installation" or EN12845 "Fixed Firefighting Systems - Automatic Sprinkler Systems - Design, Installation and Maintenance"

Maximum Working Pressure

12,1 bar (175 psi)

Discharge Coefficient

80,6 LPM/bar$^{1/2}$ (K=5.6 GPM/psi$^{1/2}$)

Temperature Rating

74°C (165°F)

Finishes

Sprinkler: White/Gray
Escutcheon: White/Gray

Physical Characteristics

Frame	Brass
Deflector Assembly	Bronze
Sealing Assembly	Beryllium Nickel w/TEFLON
Link Assembly	Copper
Button	Brass
Deflector Guide Pins	Stainless Steel
Bridge	Stainless Steel
Levers	Stainless Steel
Plug	Plastic
Escutcheon	Steel
Installation Cup	Plastic
Installation Cup Insert	Plastic
Thread Extension	Brass
Thread Adapter	Brass
Dust Cap	Plastic

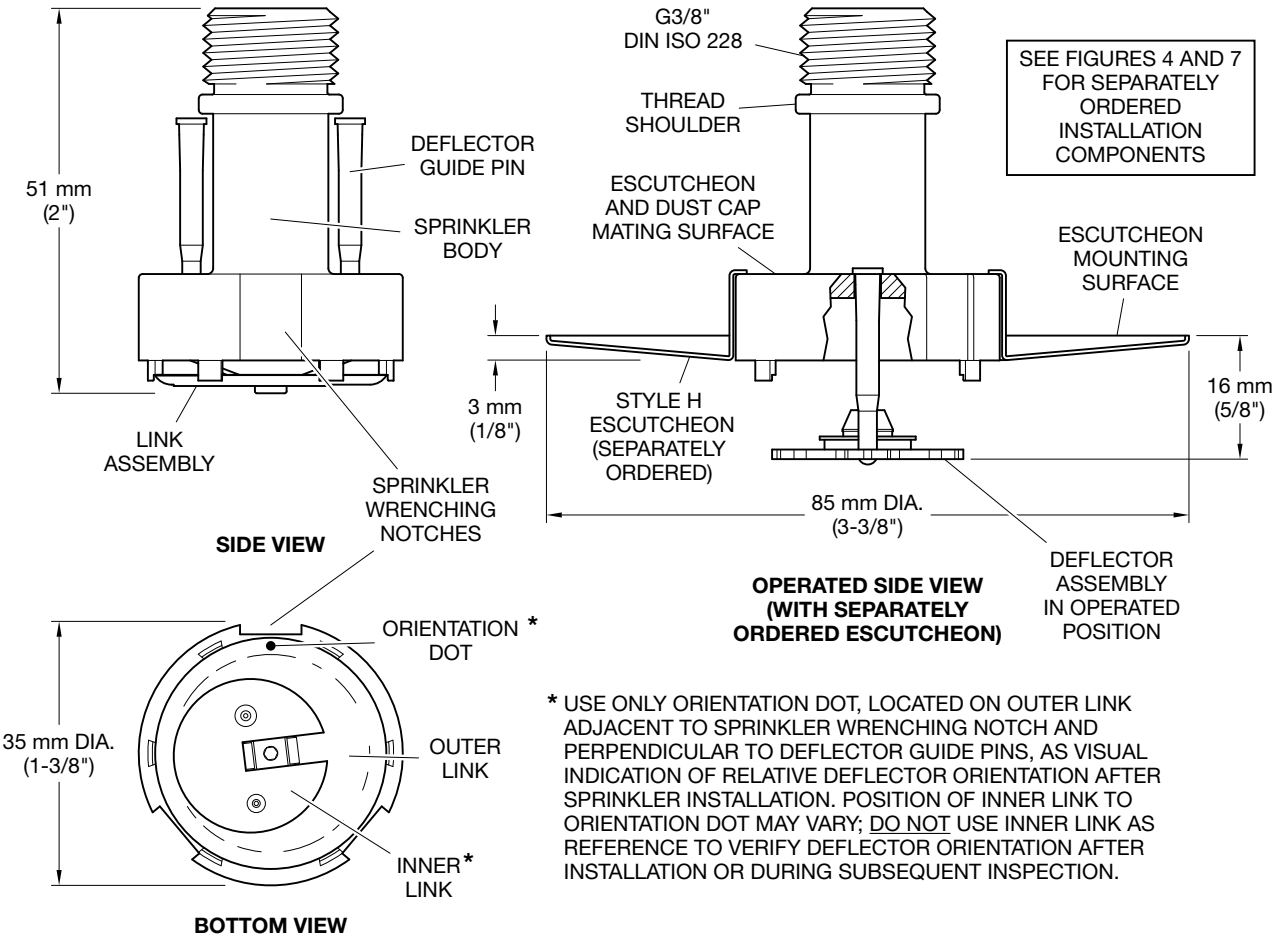

FIGURE 1
MODEL FSC FLUSH SPRINKLER ASSEMBLY

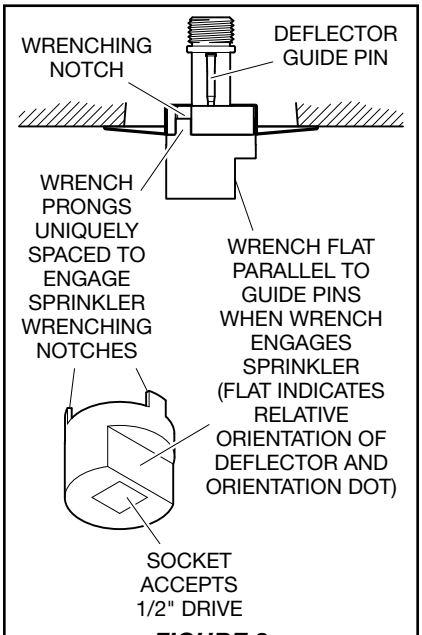

FIGURE 2
W-TYPE 25 SPRINKLER INSTALLATION WRENCH

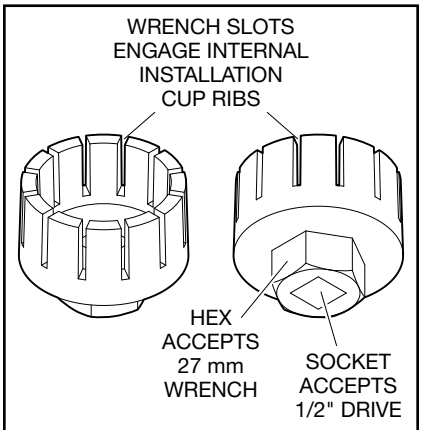

FIGURE 3
W-TYPE 28 INSTALLATION CUP REMOVAL WRENCH

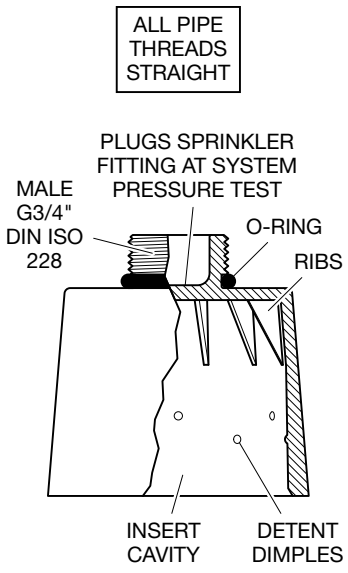

INSTALLATION CUP WITH O-RING

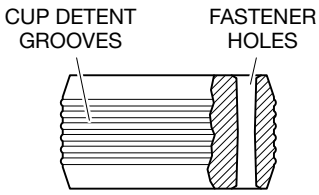

INSTALLATION CUP INSERT

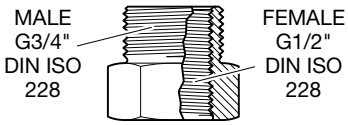

ADAPTER

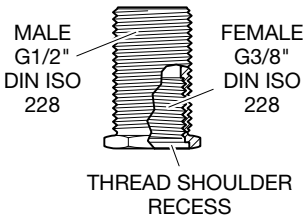

THREAD EXTENSION

FIGURE 4
MODEL FSC FLUSH SPRINKLER
CONCRETE CEILING
INSTALLATION COMPONENTS

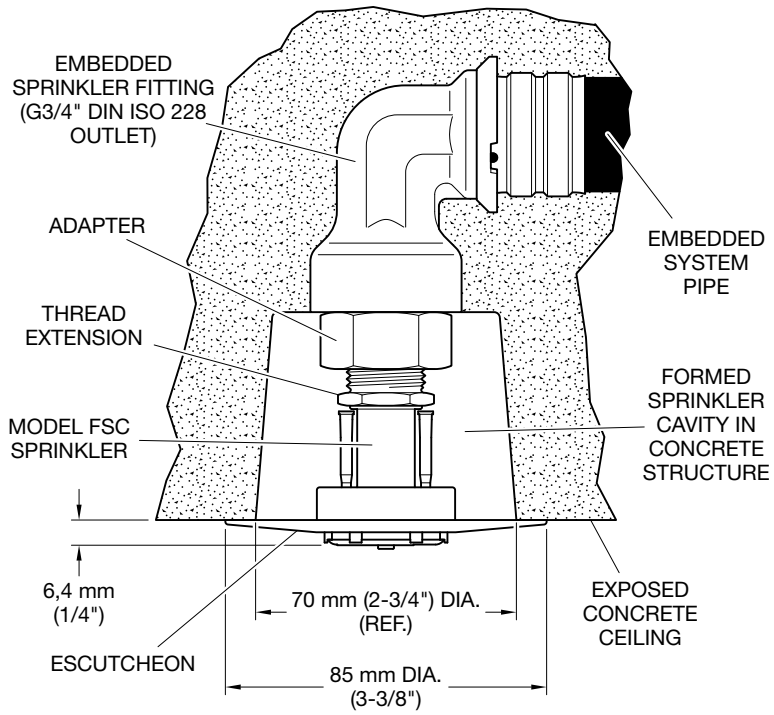

FIGURE 5
MODEL FSC FLUSH SPRINKLER
EXPOSED CONCRETE CEILING INSTALLATION

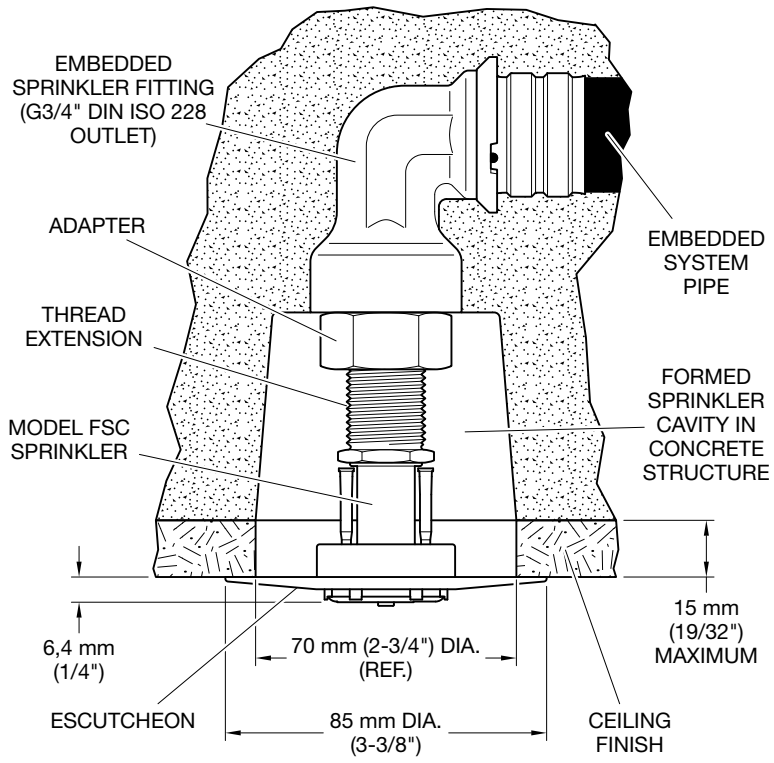

FIGURE 6
MODEL FSC FLUSH SPRINKLER
FINISHED CONCRETE CEILING INSTALLATION

Installation

Poured Concrete Ceiling/Floor Application

For poured concrete ceiling/floor applications, TYCO Model FSC 80 K-factor Flush Sprinklers must be installed in accordance with Steps 1 through 12 of this procedure:

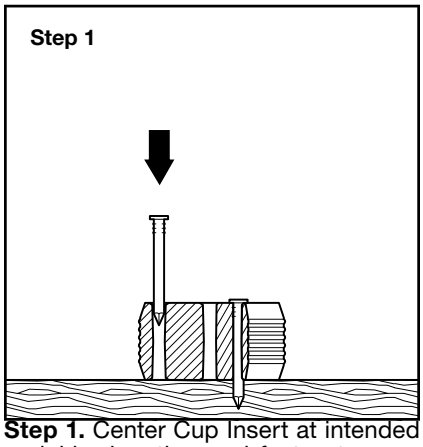

Step 1. Center Cup Insert at intended sprinkler location and fasten to concrete form with either nails or screws.

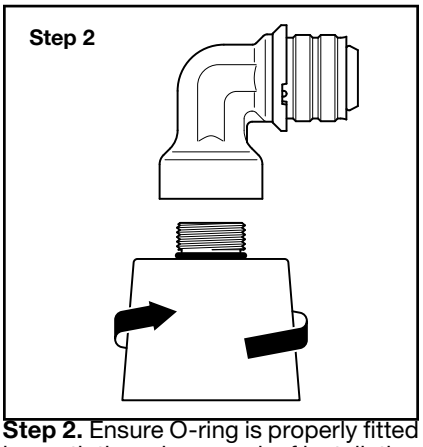

Step 2. Ensure O-ring is properly fitted beneath threads on neck of installation cup. Screw Installation Cup into sprinkler fitting ensuring top of installation cup is flush against face of sprinkler fitting.

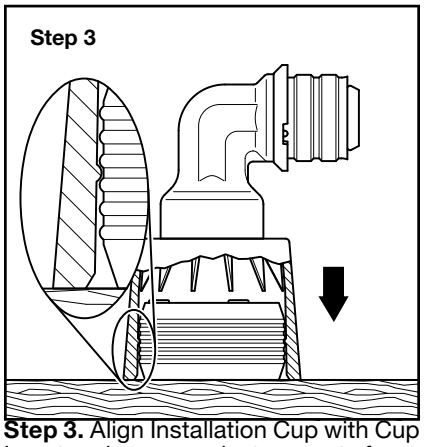

Step 3. Align Installation Cup with Cup Insert and press against concrete form. Ensure Installation Cup snaps into place, fully engaging Cup Insert, and is flush against concrete form.

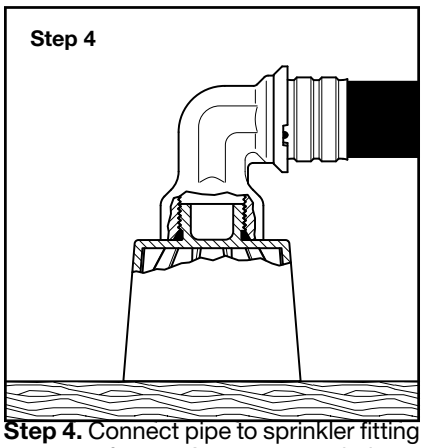

Step 4. Connect pipe to sprinkler fitting per manufacturer's recommendations.

Repeat steps 1 through 4 for remaining sprinkler locations in system. Perform system pressure test only after pipes have been properly connected to all sprinkler fittings.

Note: *Installation Cup serves as sprinkler fitting plug during system pressure test.*

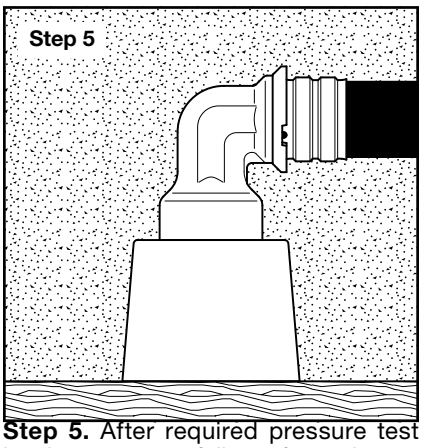

Step 5. After required pressure test has been successfully performed, pour concrete ceiling/floor. Ensure concrete is distributed evenly around installation cup, sprinkler fitting and pipe.

CAUTION

Use extreme caution when distributing concrete around pipe so as not to nick or split pipe. Failure to do so may result in equipment damage and/or system failure.

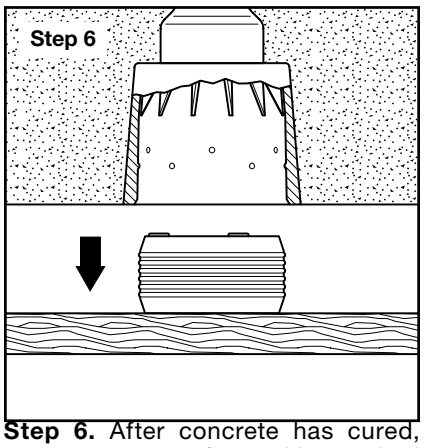

Step 6. After concrete has cured, remove concrete form with attached Cup Insert.

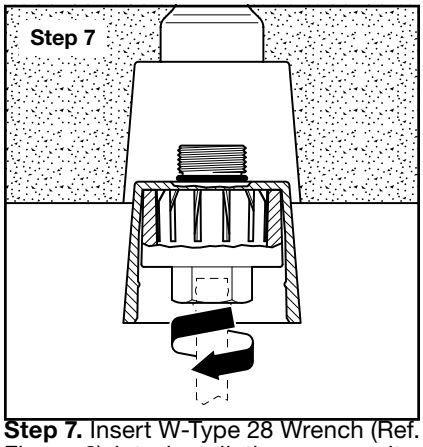

Step 7. Insert W-Type 28 Wrench (Ref. Figure 3) into installation cup cavity, fully seating and engaging internal cup ribs. Applying 27 mm hex wrench or 1/2 inch drive, unscrew Installation Cup from sprinkler fitting. Ensure O-ring is removed with Installation Cup from sprinkler fitting outlet and sprinkler cavity.

Note: *Apply ceiling finish or coating before proceeding to sprinkler installation in remaining steps.*

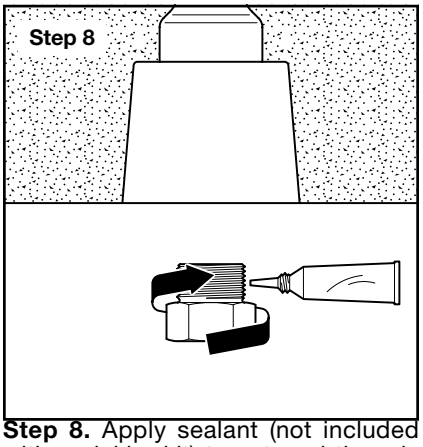

Step 8. Apply sealant (not included with sprinkler kit) to external threads of adapter. Hand-tighten Adapter into sprinkler fitting. Ensure adapter shoulder is flush against face of fitting.

NOTICE

Ensure sealant avoids contact with internal threads of adapter. Failure to do so may prevent proper assembly of remaining components.

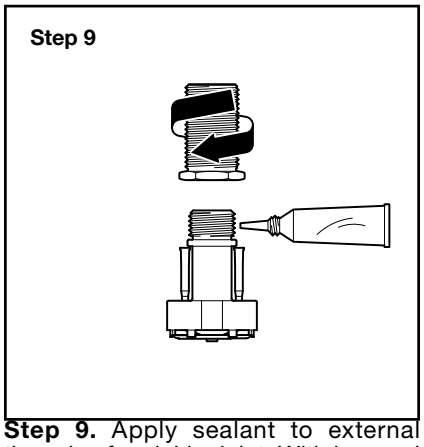

Step 9. Apply sealant to external threads of sprinkler inlet. With hex end of thread extension oriented toward sprinkler inlet, hand-tighten onto sprinkler threads until recess is seated on sprinkler thread shoulder.

NOTICE

Ensure sealant avoids contact with sprinkler guide pins and internal waterway of sprinkler inlet. Failure to do so may result in equipment failure.

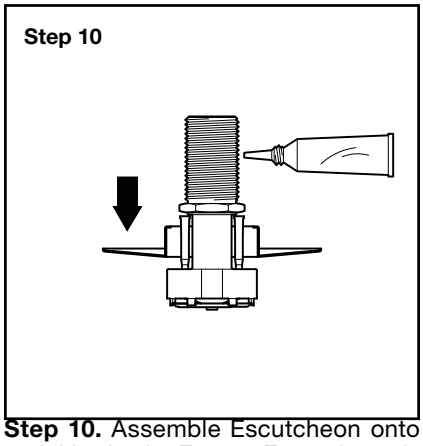

Step 10. Assemble Escutcheon onto sprinkler body. Ensure Escutcheon is flush against sprinkler body mating surface. Apply sealant to external threads of thread extension.

NOTICE

Ensure sealant avoids contact with sprinkler guide pins and internal waterway of thread extension. Failure to do so may result in equipment failure.

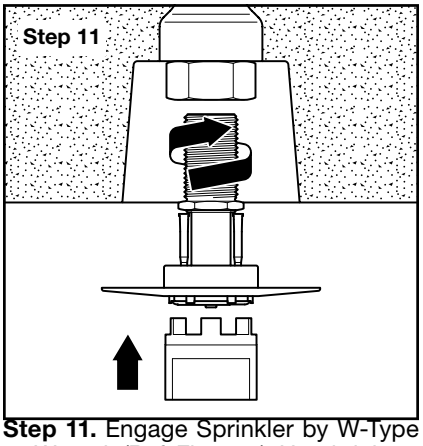

Step 11. Engage Sprinkler by W-Type 25 Wrench (Ref. Figure 2). Hand-tighten (19 N·m [14 lb-ft] Maximum) assembly into Adapter. Ensure Escutcheon is flush against ceiling mounting surface and Sprinkler is oriented as intended (refer to Figures 1 and 2 for orientation details).

Note: *W-Type 25 Wrench engages Sprinkler in only one way. When Sprinkler is engaged by Wrench, flat on Wrench is parallel to sprinkler deflector guide pins, indicating during installation relative sprinkler deflector orientation.*

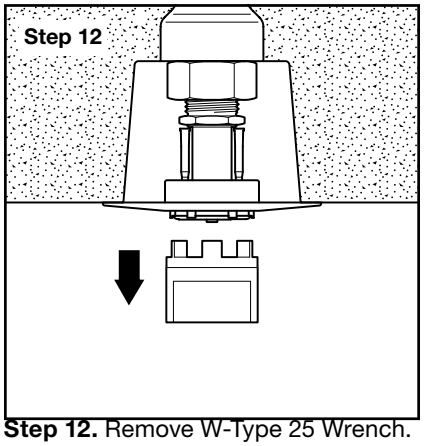

Step 12. Remove W-Type 25 Wrench.

Installation

Suspended Ceiling Application

For suspended ceiling applications, TYCO Model FSC 80 K-factor Flush Sprinklers must be installed in accordance with Steps A through F of this procedure:

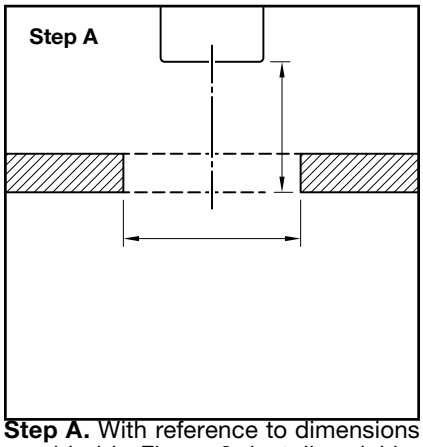

Step A. With reference to dimensions provided in Figure 8, install sprinkler fitting at proper distance above finished suspended ceiling level and cut clearance hole centered on sprinkler fitting through ceiling panel.

Note: *Ensure ceiling panel is properly installed before proceeding to sprinkler installation in remaining steps.*

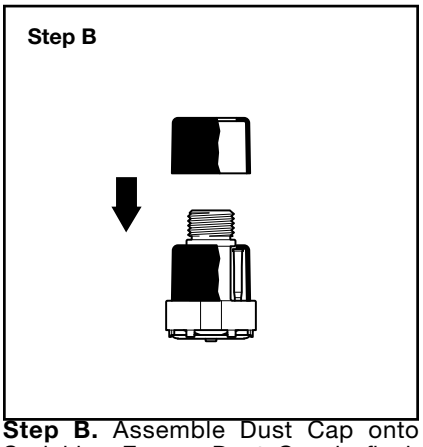

Step B. Assemble Dust Cap onto Sprinkler. Ensure Dust Cap is flush against sprinkler body mating surface.

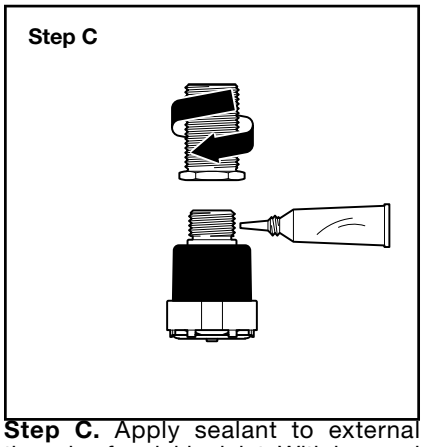

Step C. Apply sealant to external threads of sprinkler inlet. With hex end of thread extension oriented toward sprinkler inlet, hand-tighten onto sprinkler threads.

NOTICE

Ensure sealant avoids contact with sprinkler guide pins and internal waterway of sprinkler inlet. Failure to do so may result in equipment failure.

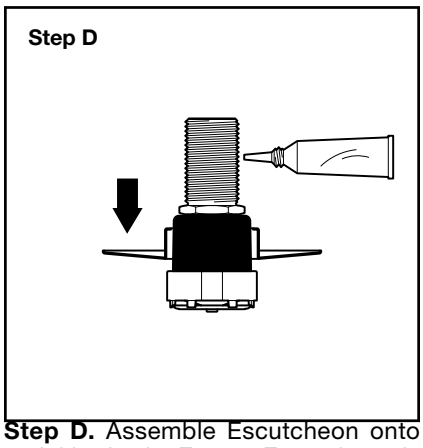

Step D. Assemble Escutcheon onto sprinkler body. Ensure Escutcheon is flush against sprinkler body mating surface. Apply sealant to external threads of thread extension.

NOTICE

Ensure sealant avoids contact with sprinkler guide pins and internal waterway of thread extension. Failure to do so may result in equipment failure.

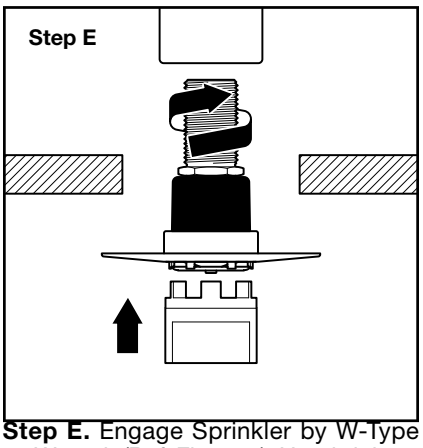

Step E. Engage Sprinkler by W-Type 25 Wrench (Ref. Figure 2). Hand-tighten (19 N·m [14 ft- lb] Maximum) assembly into sprinkler fitting. Ensure Escutcheon is flush against ceiling mounting surface and Sprinkler is oriented as intended (refer to Figures 1 and 2 for orientation details).

Note: *W-Type 25 Wrench engages Sprinkler in only one way. When Sprinkler is engaged by Wrench, flat on Wrench is parallel to sprinkler deflector guide pins, indicating during installation relative sprinkler deflector orientation.*

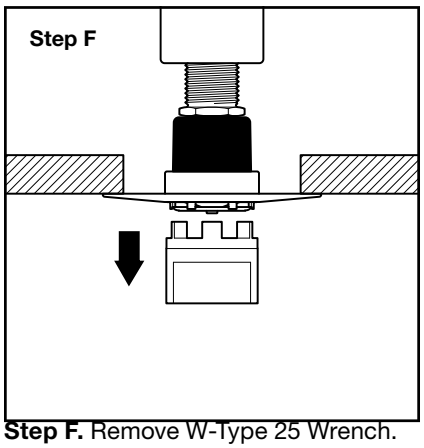

Step F. Remove W-Type 25 Wrench.

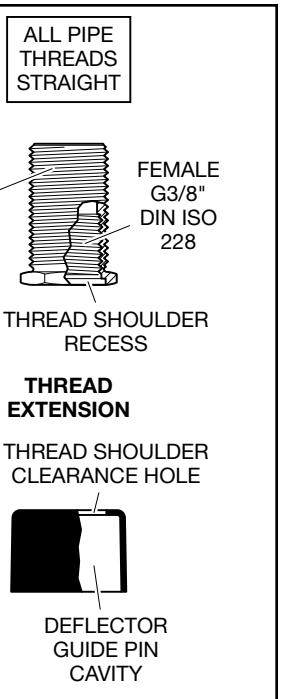

FIGURE 7
MODEL FSC FLUSH SPRINKLER SUSPENDED CEILING INSTALLATION COMPONENTS

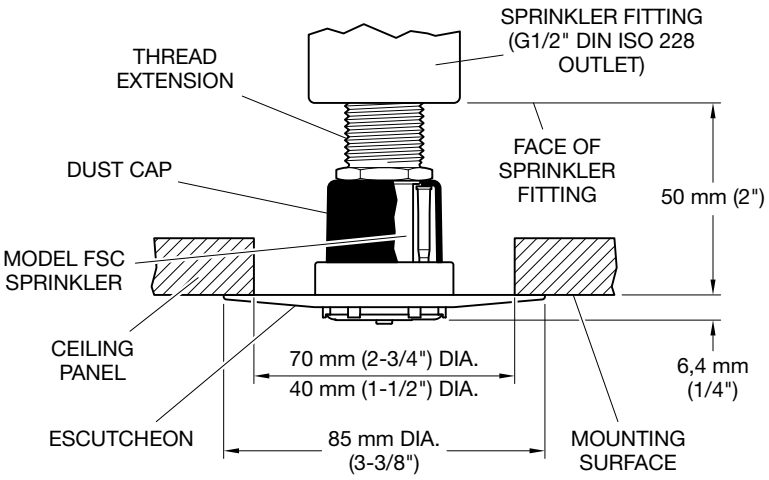

FIGURE 8
MODEL FSC FLUSH SPRINKLER SUSPENDED CEILING INSTALLATION

Design Criteria

General Criteria

The TYCO Model FSC 80 K-factor Flush Sprinkler is intended to be installed per CEA 4001 “Sprinkler Systems: Planning and Installation” or EN12845 “Fixed Firefighting Systems - Automatic Sprinkler Systems - Design, Installation and Maintenance” where Flush Sprinklers are permitted. Only escutcheons shown in Figure 1 can be utilized with the FSC Sprinkler.

In all cases, CEA 4001 “Sprinkler Systems: Planning and Installation” or EN12845 “Fixed Firefighting Systems - Automatic Sprinkler Systems - Design, Installation and Maintenance” must be followed to ensure proper installation. The FSC Sprinkler can be used in numerous scenarios including installation in concrete ceilings/floors assemblies and suspended ceilings.

Care and Maintenance

TYCO Model FSC 80 K-factor Flush Sprinklers must be maintained and serviced in accordance with this section:

Service inspections should be made on a regular basis to detect possible damage or alterations to the sprinkler and escutcheon. Inspections should include making certain that the escutcheon is held fast to the mounting surface. Damaged or altered sprinklers are to be replaced immediately to avoid personal injury and to prevent use for causing personal injury, as well as to maintain the sprinkler system in an operative condition.

Before closing a fire protection system main control valve for maintenance work on the fire protection system that it controls, obtain permission to shut down the affected fire protection system from the proper authorities and notify all personnel who may be affected by this action.

Sprinklers which are found to be leaking or exhibiting visible signs of corrosion must be replaced.

Automatic sprinklers must never be painted, plated, coated, or otherwise altered after leaving the factory. Modified sprinklers must be replaced. Sprinklers that have been exposed to corrosive products of combustion, but have not operated, should be replaced if they cannot be completely cleaned by wiping the sprinkler with a cloth or by brushing it with a soft bristle brush.

Care must be exercised to avoid damage to the sprinklers – before, during, and after installation. Sprinklers damaged by dropping, striking, wrench twist/slippage, or the like, must be replaced.

Frequent visual inspections are recommended to be initially performed for sprinklers installed in potentially corrosive atmospheres to verify the integrity of the materials of construction as they may be affected by the corrosive conditions present for a given installation.

The owner is responsible for the inspection, testing, and maintenance of their fire protection system and devices in compliance with this document, as well as with the applicable standards of the approval agency and standards of any other authority having jurisdiction. Contact the installing contractor or product manufacturer with any questions.

Sprinklers are recommended to be inspected, tested, and maintained by a qualified Inspection Service in accordance with local requirements and/or national codes.

Limited Warranty

For warranty terms and conditions,visit www.tyco-fire.com.

Ordering Procedure

Contact your local distributor for availability. When placing an order, indicate the full product description and Part Number (P/N).

Sprinkler Assemblies, Concrete Ceiling Application
Specify: Model FSC 80 K-factor Flush Sprinkler, Quick Response, Standard Coverage, 74°C (165°F), with (specify) finish, with Thread Extension and Adapter, P/N (specify):

White 50-313-4-165
Gray 50-313-9-165

Sprinkler Assemblies, Suspended Ceiling Application
Specify: Model FSC 80 K-factor Flush Sprinkler, Quick Response, Standard Coverage, 74°C (165°F), with (specify) finish, P/N (specify):

White 51-313-4-165
Gray 51-313-9-165

Separately Ordered Style H Escutcheons (85 mm Diameter)

White 56-313-4-010
Gray 56-313-9-010

Separately Ordered Concrete Ceiling Application Installation Components

Concrete Ceiling Installation Kit* . . 91-313-1-110
Installation Cup with O-ring. 91-313-1-100
Cup Insert 91-313-1-004
Thread Extension. 91-313-1-008
Adapter. 91-313-1-007
* Includes: Installation Cup, O-ring, Cup Insert

Separately Ordered Suspended Ceiling Application Installation Components

Dust Cap 91-316-1-010
Thread Extension. 91-313-1-008

Separately Ordered Thread Extension and Adapter

Thread Extension. 91-313-1-008
Adapter. 91-313-1-007

Separately Ordered Sprinkler Wrench
Specify: W-Type 25 Sprinkler Installation Wrench, P/N 56-314-1-001

Separately Ordered Installation Cup Wrench
Specify: W-Type 28 Installation Cup Removal Wrench, P/N 56-000-4-301

1467 Elmwood Avenue, Cranston, RI 02910 | Telephone +1-401-781-8220

© 2022 Johnson Controls. All rights reserved. All specifications and other information shown were current as of document revision date and are subject to change without notice.

TEFLON is a trademark of The Chemours Company FC, LLC

Johnson Controls