Model EC-HS — 80 K-factor, Quick Response Extended Coverage Horizontal Sidewall Sprinklers Installations per VdS CEA 4001, Annex E, LH/OH1

IMPORTANT

Refer to Technical Data Sheet TFP2300 for warnings pertaining to regulatory and health information.

Always refer to Technical Data Sheet TFP700 for the "INSTALLER WARNING" that provides cautions with respect to handling and installation of sprinkler systems and components. Improper handling and installation can permanently damage a sprinkler system or its components and cause the sprinkler to fail to operate in a fire situation or cause it to operate prematurely.

Scan the QR code or enter the URL in a web browser to access the most up-to-date electronic version of this document. Data rates may apply.

docs.jci.com/tycofire/tfp288

General Description

The Model EC-HS, 80 K-factor, Extended Coverage Horizontal Sidewall Sprinklers are extended coverage, decorative 3 mm glass bulb type spray sprinklers. They are to be installed according to VdS CEA 4001 under smooth ceilings in Light or Ordinary Hazard 1, as well as in accordance with Annex E of VdS CEA 4001 - for example in commercial occupancies such as churches, restaurant seating areas, hotels, educational facilities, and offices. With their coverage up to 21 m^2, they are designed for installation along a wall or the side of a beam and just beneath a smooth and level ceiling. Horizontal sidewall sprinklers are commonly used instead of pendent or upright sprinklers due to aesthetics or building construction considerations, where piping across the ceiling is not desirable.

The recessed version of the Model EC-HS sprinkler utilizes either of the following escutcheons:

- Style 10 recessed escutcheon with 13 mm of recessed adjustment or up to 19 mm of total adjustment from the flush sidewall position.
- Two-piece Style 20 recessed escutcheon with 6 mm of recessed adjustment or up to 13 mm of total adjustment from the flush sidewall position. The adjustment provided by the Recessed Escutcheon reduces the accuracy to which the fixed pipe lengths to the sprinklers must be cut.

NOTICE

The Model EC-HS Sprinklers described herein must be installed and maintained in compliance with this document and with the applicable standards recognized by the Approval agency (VdS recognizes VdS EA4001), in addition to the standards of any other authorities having jurisdiction. Failure to do so may impair the performance of these devices.

The owner is responsible for maintaining their fire protection system and devices in proper operating condition. The installing contractor or sprinkler manufacturer should be contacted with any questions.

Sprinkler Identification Number

TY3330. . . . EC-HS, 80K, 1/2 in. NPT

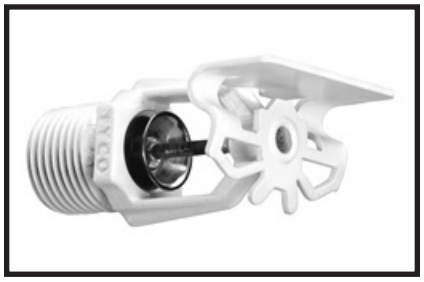



Technical Data

Approvals
VdS Approved

Maximum Working Pressure
12 bar

Discharge Coefficient
K = 80 Lpm/bar$^{1/2}$

Temperature Ratings
57°C, 68°C, and 79°C.

Response Sensitivity
Quick response, Response Time Index (RTI) < 50

Finishes
Sprinkler: See Table B

Recessed Escutcheon: Brass Plated Pure White, or Chrome Plated.

Physical Characteristics

Frame	Bronze
Button	Brass/Copper
Sealing Assembly	Beryllium Nickel w/TEFLON
Bulb	Glass
Compression Screw	Bronze
Deflector	Bronze

Operation

The glass bulb contains a fluid which expands when exposed to heat. When the rated temperature is reached, the fluid expands sufficiently to shatter the glass bulb, allowing the sprinkler to activate and water to flow.

Design Criteria

The Model EC-HS Extended Coverage Horizontal Sidewall Sprinklers are to be installed per VdS CEA 4001 under smooth ceilings in Light or Ordinary Hazard 1, as well as in accordance with Annex E of VdS CEA 4001. Only the Style 10 or 20 Recessed Escutcheon, as applicable, is to be used for recessed installations.

The following design criteria is provided as a general guide. Refer to VdS CEA4001 for complete installation rules.

Maximum Sprinkler Coverage Area
21 m^2 (separated with F30 fire resistance in accordance to DIN4102)

Maximum Ceiling Height
4,1 m

Maximum Room Depth
- 1 x sprinkler line: 6,5 m
- 2 x opposite sprinkler lines: 11 m

Maximum Coverage Width
4,5 m

Sprinkler Spacing Along Wall (Sprinkler Coverage Width)
3,0 m to 4,5 m

Minimum Sprinkler to Room Corner Distance
0,5 m

Maximum Sprinkler Deflector to Wall Distance
0,3 m

Deflector-to-Ceiling Distance
0,10 m to 0,25 m

Minimum Discharge Pressure
- 2,5 bar for less than 2,8 m room height
- 3,0 bar for equal to and greater than 2,8 m room height

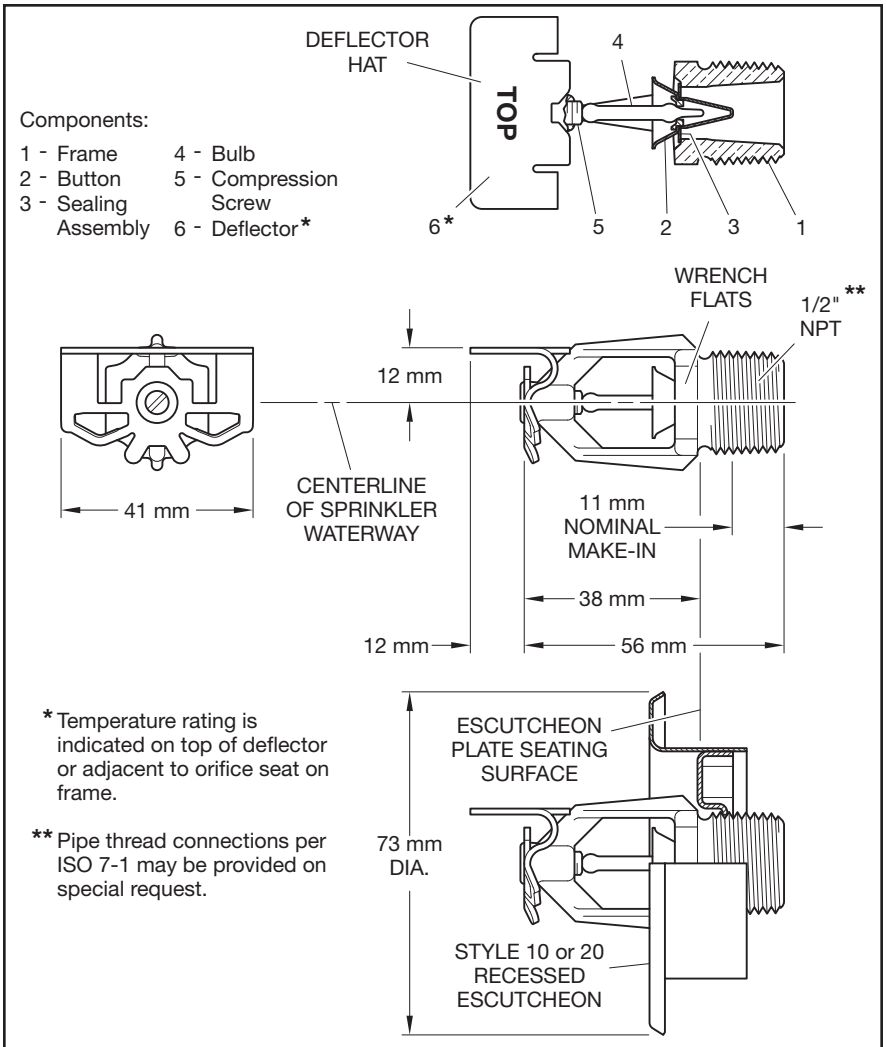

FIGURE 1
MODEL EC-HS (TY3330) EXTENDED COVERAGE HORIZONTAL SIDEWALL SPRINKLERS 80 K-FACTOR, 1/2 INCH NPT

K-factor	Type	Temp. Rating	Bulb Liquid Color	Sprinkler Finish		
				Natural Brass	Chrome Plated	Polyester
80 1/2 in. NPT	EC-HS (TY3330)	57°C	Orange	1		
		68°C	Red			
		79°C	Yellow			
80 1/2 in. NPT	Recessed EC-HS[1] (TY3330)	57°C	Orange	4		
		68°C	Red			
		79°C	Yellow			
80 1/2 in. NPT	Recessed EC-HS[2] (TY3330)	57°C	Orange	4		
		68°C	Red			
		79°C	Yellow			

NOTES:
1. VdS Approved. For more information contact TYCO Fire Protection Products, www.tyco-fire.com.
2. Installed with Style 10 recessed Escutcheon. See Figure 2.
3. Installed with Style 20 recessed Escutcheon. See Figure 3.
4. Currently not VdS approved.

TABLE A
LABORATORY LISTINGS AND APPROVALS (See Design Criteria Section)

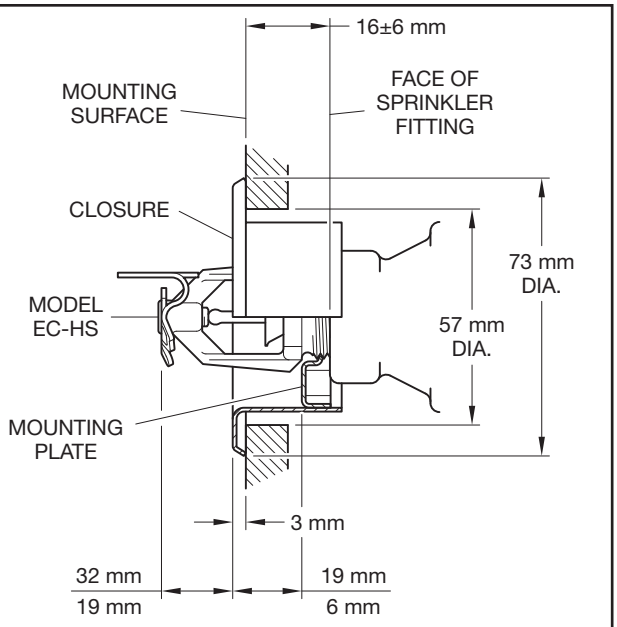

FIGURE 2
MODEL EC-HS RECESSED EC SIDEWALL SPRINKLER ASSEMBLY WITH TWO-PIECE 19 MM TOTAL ADJUSTMENT STYLE 10 RECESSED ESCUTCHEON 80 K-FACTOR, 1/2 INCH NPT

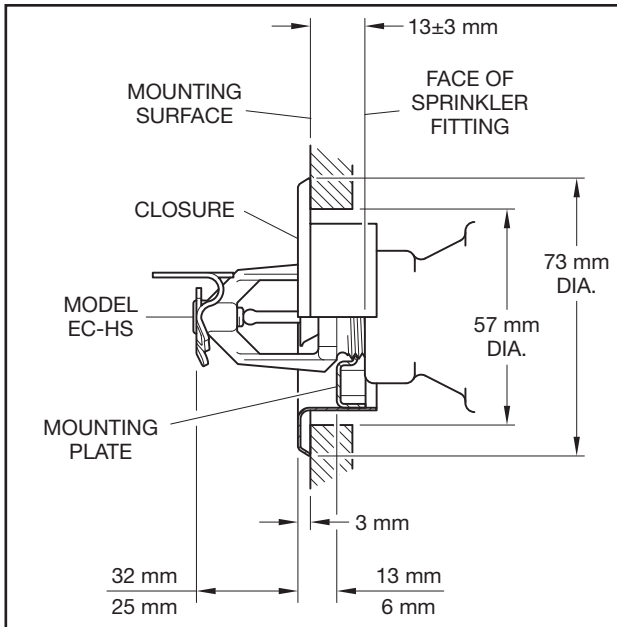

FIGURE 3
MODEL EC-HS RECESSED EC SIDEWALL SPRINKLER ASSEMBLY WITH TWO-PIECE 13 MM TOTAL ADJUSTMENT STYLE 20 RECESSED ESCUTCHEON 80 K-FACTOR, 1/2 INCH NPT

Installation

The Model EC-HS Sprinklers must be installed in accordance with this section.

General Instructions
Do not install any bulb type sprinkler if the bulb is cracked or there is a loss of liquid from the bulb. With the sprinkler held horizontally, a small air bubble should be present. The diameter of the air bubble is approximately 1,6 mm.

A 1/2 in. NPT sprinkler joint should be obtained with a minimum to maximum torque of 9,5 N·m to 19,0 N·m. Higher levels of torque may distort the sprinkler inlet and cause leakage or impairment of the sprinkler.

Do not attempt to make-up for insufficient adjustment in the escutcheon plate by under- or over-tightening the sprinkler. Re-adjust the position of the sprinkler fitting to suit.

Series Model EC-HS Sidewall Sprinklers
The Series Model EC-HS Sidewall Sprinklers must be installed in accordance with the following instructions.

Step 1. Horizontal sidewall sprinklers are to be installed with their centerline perpendicular to the back wall and parallel to the ceiling. The word “TOP” on the deflector is to face towards the ceiling.

Step 2. With pipe thread sealant applied to the pipe threads, hand tighten the sprinkler into the sprinkler fitting.

Step 3. Tighten the sprinkler into the sprinkler fitting using only the W-Type 6 Sprinkler Wrench shown in Figure 4.

Apply the wrench to the sprinkler wrench flats shown in Figure 1.

Series Model EC-HS Recessed Sidewall Sprinklers
The Model EC-HS Recessed Sidewall Sprinklers must be installed in accordance with the following instructions.

Step 1. Horizontal sidewall sprinklers are to be installed with their centerline perpendicular to the back wall and parallel to the ceiling. The word “TOP” on the deflector is to face towards the ceiling.

Step 2. After installing the style 10 or 20 mounting plate, as applicable, over the sprinkler threads and with pipe thread sealant applied to the pipe threads, hand tighten the sprinkler into the sprinkler fitting.

Step 3. Tighten the sprinkler into the sprinkler fitting using only the W-Type 7 Recessed Sprinkler Wrench shown in Figure 5. Apply the wrench to the sprinkler wrench flats shown in Figure 1.

Step 4. After the wall has been installed or the finish coat has been applied, slide on the style 10 or 20 closure over the Model EC-HS Sprinkler and push the closure over the mounting plate until its flange comes in contact with the wall.

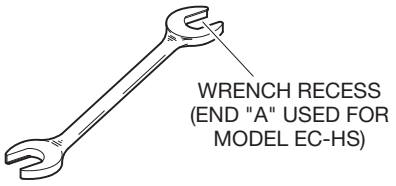

FIGURE 4
W-TYPE 6 SPRINKLER WRENCH

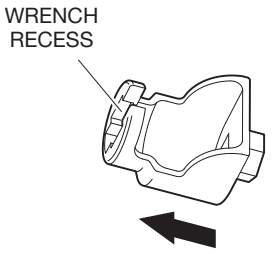

FIGURE 5
W-TYPE 7 RECESSED SPRINKLER WRENCH

P/N 57 – XXX – X – XXX

	Model	SIN
367	Model EC-HS, 80k	TY3330

	Sprinkler
1	Natural Brass
3	Pure White (RAL9010) Polyester
9	Chrome Plated

	Temperature Rating
135	57°C
155	68°C
175	79°C

TABLE B
SERIES EC-HS EXTENDED COVERAGE HORIZONTAL SIDEWALL SPRINKLERS
PART NUMBER SELECTION

Care and Maintenance

The Model EC-HS Sprinklers must be maintained and serviced in accordance with this section.

Before closing a fire protection system main control valve for maintenance work on the fire protection system that it controls, permission to shut down the affected fire protection system must be obtained from the proper authorities and all personnel who may be affected by this action must be notified.

The owner must assure that the sprinklers are not used for hanging of any objects; otherwise, non-operation in the event of a fire or inadvertent operation may result.

Absence of an escutcheon, which is used to cover a clearance hole, may delay the time to sprinkler operation in a fire situation.

Sprinklers that are found to be leaking or exhibiting visible signs of corrosion must be replaced.

Automatic sprinklers must never be painted, plated, coated or otherwise altered after leaving the factory. Modified sprinklers must be replaced.

Sprinklers that have been exposed to corrosive products of combustion, but have not operated, should be replaced if they cannot be completely cleaned by wiping the sprinkler with a cloth or by brushing it with a soft bristle brush.

Care must be exercised to avoid damage to the sprinklers - before, during, and after installation. Sprinklers damaged by dropping, striking, wrench twist/slippage, or the like, must be replaced. Also, replace any sprinkler that has a cracked bulb or that has lost liquid from its bulb. See Installation section.

The owner is responsible for the inspection, testing, and maintenance of their fire protection system and devices in compliance with this document, as well as with the applicable standards of the authorities having jurisdiction. The installing contractor or sprinkler manufacturer should be contacted relative to any questions.

It is recommended that automatic sprinkler systems be inspected, tested, and maintained by a qualified Inspection Service in accordance with local requirements and/or national codes.

Limited Warranty

For warranty terms and conditions, visit www.tyco-fire.com.

Ordering Procedure

Contact your local distributor for availability. When placing an order, indicate the full product name and Part Number (P/N).

Sprinkler Assemblies with NPT Thread Connections
Specify: Model EC-HS Extended Coverage Horizontal Sidewall Sprinkler (TY3330), K=80, (specify) temperature rating, (specify) finish, P/N (specify from Table B)

Recessed Escutcheon
Specify: Style (10 or 20) Recessed Escutcheon with (specify) finish, P/N (specify*)

* Refer to Technical Data Sheet TFP770.

Sprinkler Wrench
Specify: W-Type 6 Sprinkler Wrench, P/N 56-000-6-387

Specify: W-Type 7 Recessed Sprinkler Wrench, P/N 56-850-4-001

1467 Elmwood Avenue, Cranston, RI 02910 | Telephone +1-401-781-8220

© 2022 Johnson Controls. All rights reserved. All specifications and other information shown were current as of document revision date and are subject to change without notice.

NATIONAL FIRE PROTECTION ASSOCIATION and NFPA are registered trademarks of National Fire Protection Association;
TEFLON is a trademark of The Chemours Company FC, LLC

Johnson Controls