Solenoid Valves For Automatic Water Control Valves Electric Release Service

IMPORTANT
Refer to Technical Data Sheet TFP2300 for warnings pertaining to regulatory and health information.

Scan the QR code or enter the URL in a web browser to access the most up-to-date electronic version of this document. Data rates may apply.

docs.jci.com/tycofire/tfp2180

General Description

The Solenoid Valves for Releasing Service are intended for use with TYCO Automatic Water Control Valves which are to be electrically actuated and used in deluge or preaction fire protection systems. The solenoid valves are used in conjunction with an electric releasing panel that is listed or approved (as appropriate for the authority having jurisdiction) for fire protection releasing service, and where the releasing panel is operated by listed or approved (as appropriate for the authority having jurisdiction) electric fire detectors and/or initiating devices.

NOTICE

The Solenoid Valves described herein must be installed and maintained in compliance with this document, as well as with the applicable standards of the NATIONAL FIRE PROTECTION ASSOCIATION (NFPA), in addition to the standards of any other authorities having jurisdiction. Failure to do so may impair the integrity of this device.

The owner is responsible for maintaining their fire protection system and devices in proper operating condition. Contact the installing contractor or product manufacturer with any questions.

Technical Data

Approvals
See Table A

Specifications
See Tables B, C, and D

Dimensions
See Figures 1, 2, 3, and 4

Operation

Operation of an electrical device such as a heat sensitive thermostat, smoke detector, or electric manual pull station signals the releasing panel to energize the releasing circuit. Typically energizing the releasing circuit opens the normally closed de-energized solenoid valve to release water pressure from the differential chamber of the automatic water control valve, which in turn permits the automatic water control valve to open and allow a flow of water into the system piping.

In the case of automatic water control valves arranged for remote-resetting deluge systems, subsequent de-energizing of the release circuit will permit the automatic water control valve to reset and stop flow of water into the system piping.

In the case of automatic water control valves arranged for the Preaction Type A Systems designed in compliance with EN12845, in addition to a normally closed de-energized solenoid valve, a normally open de-energized solenoid value is used. The relationship of the two solenoid valves permit the preaction system to automatically default to a dry pipe system in the event of a power loss.



Installation

The Solenoid Valves For Releasing Service are to be installed in accordance with this section.

Step 1. Check the nameplate for the correct catalog number and voltage, as well as confirming the intended application as it relates to the system design and environmental conditions for the installation of electrical devices.

Step 2. The solenoid valve is to be installed as part of the automatic water control valve trim in accordance with the applicable instructions provided for the automatic water control valve. Confirm the appropriate flow direction.

Step 3. Only apply pipe thread sealant sparingly to the male pipe threads of the connecting pipe nipples.

Step 4. To prevent distortion of the solenoid valve body, always wrench on the portion adjacent to the pipe to which it is being connected. Do not use the solenoid valve to force a pipeline into position. Doing so may result in distortion of the valve.

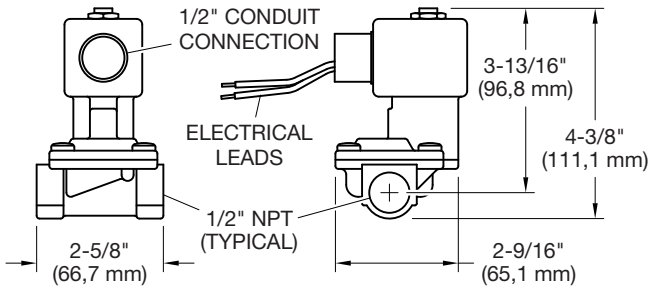

FIGURE 1
175 PSI (12,1 BAR) MAXIMUM SERVICE PRESSURE SOLENOID VALVE IN-SERVICE NORMALLY CLOSED & DE-ENERGIZED

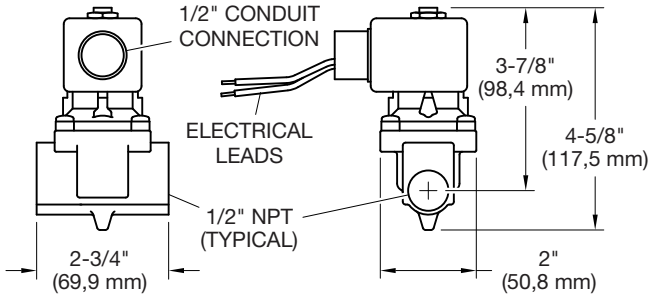

FIGURE 2
300 PSI (20,7 BAR) MAXIMUM SERVICE PRESSURE SOLENOID VALVE IN-SERVICE NORMALLY CLOSED & DE-ENERGIZED

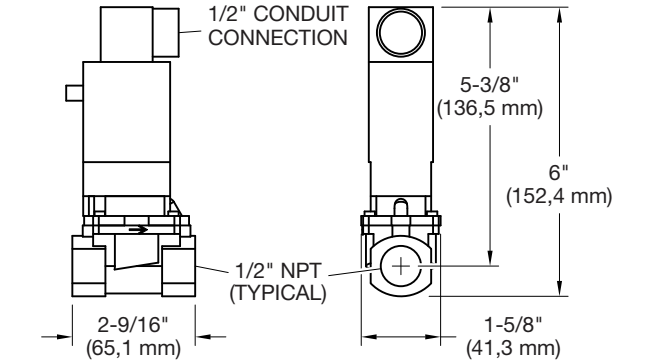

FIGURE 3
232 PSI (16,0 BAR) MAXIMUM SERVICE PRESSURE SOLENOID VALVE IN-SERVICE NORMALLY CLOSED & DE-ENERGIZED (ENERGY PULSE TO OPEN SUBSEQUENT ENERGY PULSE TO CLOSE)

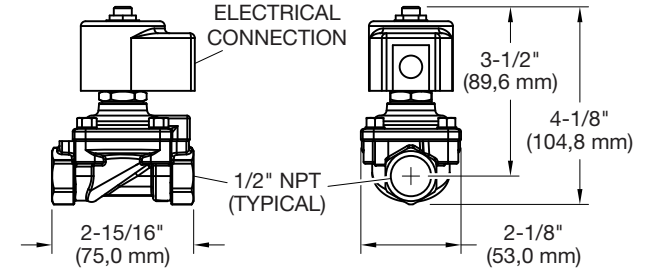

FIGURE 4
212 PSI (15,0 BAR) MAXIMUM SERVICE PRESSURE SOLENOID VALVE IN-SERVICE NORMALLY CLOSED & ENERGIZED

Step 5. Conduit and electrical connections are to be made in accordance with the requirements of the authority having jurisdiction and/or the National Electric Code. The coil assembly may be reoriented, as necessary, by first loosening the nut on top of the coil. After repositioning the coil assembly, tighten the nut with a torque of 43 lb-in. to 53 lb-in. (4,9 N·m to 6,0 N·m).

⚠ CAUTION

Turn off electrical power before connecting the Solenoid Valve to the power source.

Care and Maintenance

The following inspection procedure must be performed as indicated, in addition to any specific requirements of the NFPA, and any impairment must be immediately corrected.

Before closing a fire protection system control valve for inspection or maintenance work on the fire protection system that it controls, obtain permission to shut down the effected fire protection system from the proper authorities and all personnel who may be affected by this action must be notified.

The owner is responsible for the inspection, testing, and maintenance of their fire protection system and devices in compliance with this document, as well as with the applicable standards of the NFPA (for example, NFPA 25), in addition to the standards of any authority having jurisdiction. Contact the installing contractor or product manufacturer with any questions.

Automatic sprinkler systems are recommended to be inspected, tested, and maintained by a qualified Inspection Service.

After placing a fire protection system in service, notify the proper authorities and advise those responsible for monitoring proprietary and/or central station alarms.

NOTICE

Unless appropriate precautions are taken, operation of the Solenoid Valve when performing an inspection will result in operation of the deluge or preaction systems and/or alarms.

Notify the owner and the fire department, central station, or other signal station to which the system serves or alarms are connected before performing inspections.

FOR USE WITH DV-5A AND DV-5 DELUGE AND PREACTION SYSTEM TRIM													
Enclosure Type (NEMA Ratings)	See Figure No.	Working Water Pressure psi (bar)	Voltage	Catalog	P/N			FM[3]	VdS[3]	LPCB[3]	UL C-UL	CSA[1]	CE[2]
					AMER	EMEA	APAC						
Ordinary Location (2, 4, and 4X)	1	20-175 (1,4-12,1)	120 VAC, 60 Hz 110 VAC, 50 Hz	73218BN4UNLVN0C111P3	522871110	—	522871110				✓	✓	
	1	20-175 (1,4-12,1)	24 VDC	73218BN4UNLVN0C111C2	522871024	522871024P	522871024	✓			✓	✓	
	2	20-300 (1,4-20,7)	24 VDC	73212BN4TNLVN0C322C2	522871124	522871124P	522871124	✓	✓	✓	✓	✓	✓
	1	20-175 (1,4-12,1)	48 VDC	73218BN4UNLVN0C111C4	522871048	—	—				✓	✓	
	1	20-175 (1,4-12,1)	125 VDC	73218BN4UNLVN0C1113N	522871125	—	—				✓	✓	
	1	20-175 (1,4-12,1)	250 VDC	73218BN4UNLVN0C111N9	522871015	—	—				✓	✓	
Hazardous Location (4, 4X, 7, and 9)	1	20-175 (1,4-12,1)	110/120 VAC	73218BN4UNLVN0H111P3	522871210	—	522871210				✓	✓	
	1	20-175 (1,4-12,1)	24 VDC	73218BN4UNLVN0H111C2	522871224	522871224P	522871124	✓					
FOR USE WITH DV-5A AND DV-5 REMOTE RESETTING SYSTEM TRIM													
Enclosure Type (NEMA Ratings)	See Figure No.	Working Water Pressure psi (bar)	Voltage	Catalog	P/N			FM[3]	VdS[3]	LPCB[3]	UL C-UL	CSA[1]	CE[2]
					AMER	EMEA	APAC						
Ordinary Location	3	20-232 (1,4-16,0)	24 VDC	5282	2460566	2460566	2460566		✓		✓		✓
FOR USE WITH DV-5A AND DV-5 PREACTION TYPE A SYSTEM TRIM													
Enclosure Type (NEMA Ratings)	See Figure No.	Working Water Pressure psi (bar)	Voltage	Catalog	P/N			FM[3]	VdS[3]	LPCB[3]	UL C-UL	CSA[1]	CE[2]
					AMER	EMEA	APAC						
Ordinary Location (2, 4, and 4X)	2	20-300 (1,4-20,7)	24 VDC	7312BN4TNLVN0C322C2	522871124	522871124P	522871124		✓		✓	✓	✓
Ordinary Location	4	20-212 (1,4-15,0)	24 VDC	322G75-4270-481000C2	—	2191866	2191866		✓				✓

NOTES:
1. UL Listed and CSA Certified under the name of Parker Hannifin Corporation, Skinner Valve Division.
2. CE conformance under the name of Parker Lucifer SA.
3. Approved as a trim component for release of the Model DV-5a or DV-5 Automatic Water Control Valves.

TABLE A
APPROVALS

Inspection
The Solenoid Valves must be inspected quarterly in accordance with the following instructions:

- Verify operation of the solenoid valve following the procedure outlined in the Technical Data Sheet for the TYCO Automatic Water Control Valve.
- In general, if the voltage to the coil is correct, sluggish valve operation, excessive leakage, or noise will indicate that cleaning is required. Clean the solenoid valve in accordance with the procedures outlined by the manufacturer.

Causes of Improper Operation
- Faulty Control Circuit: Check the electrical system by energizing the releasing circuit to the solenoid valve. A metallic “click” signifies that the solenoid is operating. Absence of the “click” indicates loss of power supply. Check for loose or blown fuses, open-circuited or grounded coil, broken lead wires or broken splice connections.
- Burned-Out Coil: Check for open-circuited coil. Replace if necessary. Check supply voltage; it must be the same as specified on label or nameplate.
- Low Voltage: Check voltage across the coil leads. Voltage must be at least 85% of nameplate rating.

Enclosure Type (NEMA Ratings)	See Figure No.	Working Water Pressure psi (bar)	Voltage	Watts	AC VOLT-AMPS		DC Amps	Catalog	P/N		
					Inrush[a]	Holding[b]			AMER	EMEA	APAC
Ordinary Location (2, 4, and 4X)	1	20-175 (1,4-12,1)	120 VAC, 60 Hz 110 VAC, 50 Hz	10	31	16	–	73218BN4UNLVN0C111P3	522871110	—	522871110
	1	20-175 (1,4-12,1)	24 VDC	10	–	–	0.41	73218BN4UNLVN0C111C2	522871024	522871024P	522871024
	2	20-300 (1,4-20,7)	24 VDC	22	–	–	0.83	73212BN4TNLVN0C322C2	522871124	522871124P	522871124
	1	20-175 (1,4-12,1)	48 VDC	10	–	–	0.21	73218BN4UNLVN0C111C4	522871048	—	—
	1	20-175 (1,4-12,1)	125 VDC	11	–	–	0.08	73218BN4UNLVN0C1113N	522871125	—	—
	1	20-175 (1,4-12,1)	250 VDC	10	–	–	0.04	73218BN4UNLVN0C111N9	522871015	—	—
Hazard-ous Location (4, 4X, 7, and 9)	1	20-175 (1,4-12,1)	110/120 VAC	10	31	16		73218BN4UNLVN0H111P3	522871210	—	522871210
	1	20-175 (1,4-12,1)	24 VDC	10	–	–	0.41	73218BN4UNLVN0H111C2	522871224	522871224P	522871124

NOTES:

a. Current to start plunger moving b. Current to hold plunger open

TABLE B
SOLENOID VALVE SPECIFICATIONS
AND PART NUMBER SELECTION – DELUGE AND PREACTION SYSTEMS

Enclosure Type (NEMA Ratings)	See Figure No.	Working Water Pressure psi (bar)	Voltage	Watts	AC VOLT-AMPS		DC Amps	Catalog	P/N		
					Inrush[a]	Holding[b]			AMER	EMEA	APAC
Ordinary Location	3	20-232 (1,4-16,0)	24 VDC	11	–	–	0.46	5282	2460566	2460566	2460566

NOTES:

a. Current to start plunger moving b. Current to hold plunger open

TABLE C
SOLENOID VALVE SPECIFICATIONS
AND PART NUMBER SELECTION – REMOTE-RESETTING DELUGE SYSTEMS

Enclosure Type (NEMA Ratings)	See Figure No.	Working Water Pressure psi (bar)	Voltage	Watts	AC VOLT-AMPS		DC Amps	Catalog	P/N		
					Inrush[a]	Holding[b]			AMER	EMEA	APAC
Ordinary Location (2, 4, and 4X)	2	20-300 (1,4-20,7)	24 VDC	22	–	–	0.83	73212BN4TNLVN0C322C2	522871124	522871124P	522871124
Ordinary Location	4	20-212 (1,4-15,0)	24 VDC	8	–	–	0.33	322G75-4270-481000C2	-	2191866	2191866

NOTES:

a. Current to start plunger moving b. Current to hold plunger open

TABLE D
SOLENOID VALVE SPECIFICATIONS
AND PART NUMBER SELECTION – PREACTION TYPE A (EN12845) SYSTEMS

Limited Warranty

For warranty terms and conditions, visit www.tyco-fire.com.

Ordering Information

Orders for the Solenoid Valves must include the description and Part Number (P/N).

Solenoid Valves
Specify: (specify Catalog Number), Solenoid Valve, P/N (specify from Tables A to D)

1467 Elmwood Avenue, Cranston, RI 02910 | Telephone +1-401-781-8220

© 2026 Johnson Controls. All rights reserved. All specifications and other information shown were current as of document revision date and are subject to change without notice.

NATIONAL FIRE PROTECTION ASSOCIATION and NFPA are registered trademarks of National Fire Protection Association

Johnson Controls