Model DPV-1 Preaction Type B Valves DN100 and DN150

IMPORTANT
Refer to Technical Data Sheet TFP2300 for warnings pertaining to regulatory and health information.

Scan the QR code or enter the URL in a web browser to access the most up-to-date electronic version of this document. Data rates may apply.

docs.jci.com/tycofire/tfp1486

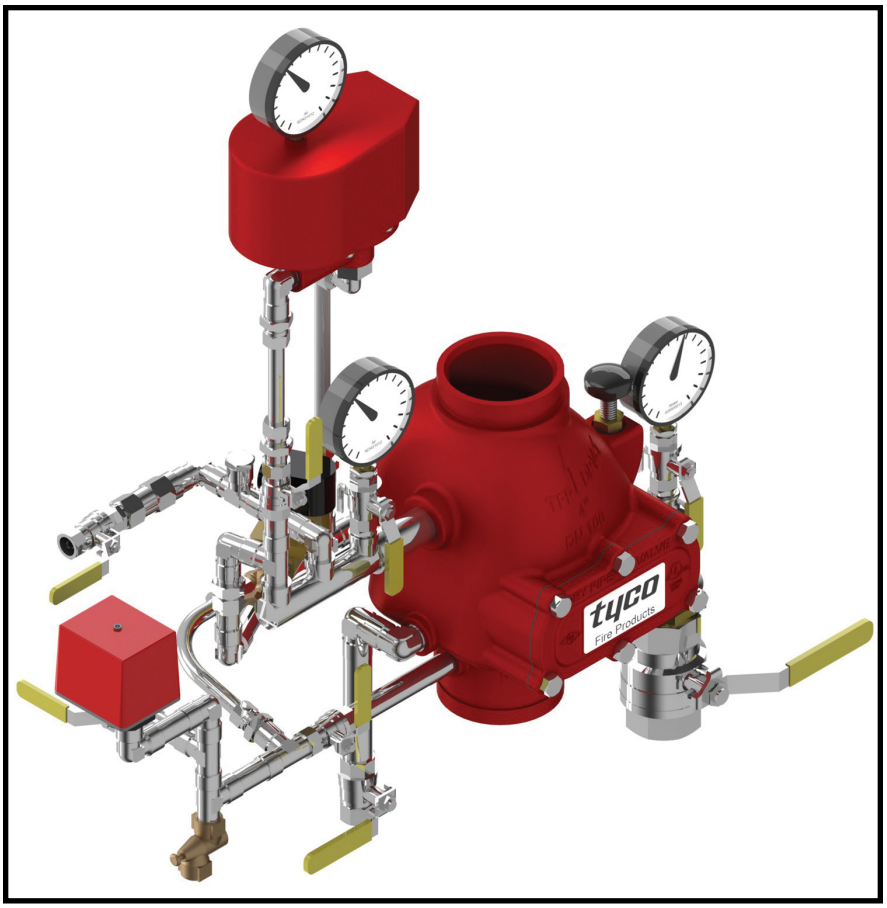

General Description

The TYCO Model DPV-1 Preaction Type B Valves automatically control the flow of water into preaction fire protection sprinkler systems upon operation of a fire detection system or operation of one or more automatic sprinklers.

The valves also provide for actuation of fire alarms upon system operation, and other features are as follows:

- External reset
- 16 bar pressure rating
- Unique offset single clapper design enabling a simple compact valve to minimize installation labor
- Ductile iron construction to ensure a lightweight valve to minimize shipping cost
- A variety of inlet and outlet connections
- Simple reset procedure through the elimination of priming water

Preaction Type B Systems are used in unheated warehouses, parking garages, attic spaces, loading docks, and other areas exposed to freezing temperatures, where water filled pipe cannot be utilized. Although the typical application for preaction type B systems are the same as for standard automatic dry pipe sprinkler systems, the added feature of system operation by a fire detection system can potentially increase the speed of water delivery by starting to pre-fill the system piping with water before a sprinkler operation. Consequently, these systems may be desirable for larger system volumes.

A TYCO Model ACC-1 Dry Pipe Valve Accelerator is provided as standard so that should operation occur via opening of one or more sprinklers prior to operation of the fire detection system, the sprinkler system will still have the capability to potentially increase the speed of water delivery.

NOTICE

The TYCO Model DPV-1 Preaction Type B Valves described herein must be installed and maintained in compliance with this document and the standards recognized by the approval agency, in addition to any other authorities having jurisdiction. Failure to do so may impair the performance of these devices.

The owner is responsible for maintaining their fire protection system and devices in proper operating condition. Contact the installing contractor or product manufacturer with any questions.

Water Supply Pressure (bar)	System Air Pressure Range, (bar)
1,4	0,7
4,1	1,0 - 1,6
5,5	1,4 - 1,9
6,9	1,7 - 2,3
8,3	2,1 - 2,6
10,0	2,4 - 3,0
11,4	2,8 - 3,3
12,8	3,1 - 3,7
14,1	3,4 - 4,0
15,5	3,8 - 4,3
16,0	4,1 - 4,6

TABLE A
SYSTEM AIR PRESSURE REQUIREMENTS

Technical Data

Approvals
VdS Approved – DN100 and DN150* (EN12845 Compliance)

** = DN65 and DN80 available upon request, without Approval*

For more information on agency approvals, contact Johnson Controls at the following office:

Kopersteden 1
7547 TJ Enschede
The Netherlands
Tel: +31-(0)53-428-4444
Fax: +31-(0)53-428-3377

Dry Pipe Valve
TYCO Model DPV-1 Preaction Type B Valves are for vertical installations (flow going up), and they are rated for use at a maximum service pressure of 16 bar (VdS Approval range of supply pressure is 3 to 16 bar). The nominal pressure loss versus flow is shown in Figure 11, and the valve installation dimensions are shown in Figure 9.

Flanged connections are drilled per ISO 2084 (PN10/16). The grooved outlet connections, as applicable, are cut in accordance with standard groove specifications for steel pipe. They are suitable for use with grooved end pipe couplings that are listed or approved for fire protection system service.

Physical Characteristics
Valve Body . . . . . .Ductile Iron
Handhole Cover . . . . . .Ductile Iron
Handhole Cover Gasket. . . . . Neoprene
Handhole Cover
Fasteners . . . . . Carbon Steel
Clapper Facing. . . . . .EPDM
Air/Water Seat Ring . . . . . Brass
Clapper. . . . . .Copper
Clapper Retaining Plate . . . . . Bronze
Latch . . . . . Bronze
Hinge Pin . . . . . .Aluminum Bronze

Note: *Components of the Model DPV-1 Preaction Type B Valve are shown in Figure 2.*

Valve Trim
The valve trim is illustrated in Figures 7, 8, and 10. The valve trim forms a part of the laboratory approval of the valve for use in preaction type B systems and is necessary for the proper operation of the valve. Each package of trim includes the following items:

- Water supply pressure gauge
- System air pressure gauge
- Main drain valve
- Low body drain valve
- Alarm test valve
- Automatic drain valve
- Dry pipe valve accelerator
- Solenoid valve

Air Supply
Table A shows the system air pressure requirements as a function of the water supply pressure. The air (or nitrogen) pressure in the sprinkler system is recommended to be automatically maintained by using one of the following pressure maintenance devices, as appropriate:

- Model AMD-1
  Air Maintenance Device
  (pressure reducing type)

  Note: *For more information, refer to technical data sheet TFP1221.*

- Model AMD-2
  Air Maintenance Device
  (compressor control type)

  Note: *For more information, refer to technical data sheet TFP1231.*

- Model AMD-3
  Nitrogen Maintenance Device
  (high pressure reducing type)

  Note: *For more information, refer to technical data sheet TFP1241.*

Operating Principles

Dry Pipe Valve

The TYCO Model DPV-1 Preaction Type B Valve is a differential type valve that utilizes a substantially lower system (air or nitrogen) pressure than the supply (water) pressure, to maintain the set position shown in Figure 3A. The differential nature of the valve is based on the area difference between the air seat and the water seat in combination with the ratio of the radial difference from the hinge pin to the center of the water seat, and the hinge pin to the center of the air seat. The difference is such that the valve has a nominal trip ratio of 5, 5:1 (water to air).

Table A establishes the minimum required system air pressure that includes a safety factor to help prevent false operations that occur due to water supply fluctuations.

The intermediate chamber of the DPV-1 valve is formed by the area between the air seat and water seat as shown in Figure 3B. The intermediate chamber normally remains at atmospheric pressure through the alarm port connection and the valve trim to the normally open automatic drain valve as shown in Figures 1 and 10. Having the intermediate chamber as shown in Figure 3B open to atmosphere is critical to the DPV-1 valve remaining set, otherwise the full resulting pressure of the system air pressure on top of the clapper assembly cannot be realized. For example, if the system air pressure is 1,7 bar and there was 1,0 bar pressure trapped in the intermediate chamber, the resulting pressure across the top of the clapper would only be 0,7 bar. This pressure would be insufficient to hold the clapper assembly closed against a water supply pressure of 6,9 bar.

The dry pipe valve is automatically operated by one of two means:

- Operation by a fire detection device
- Operation by the opening of one or more sprinklers

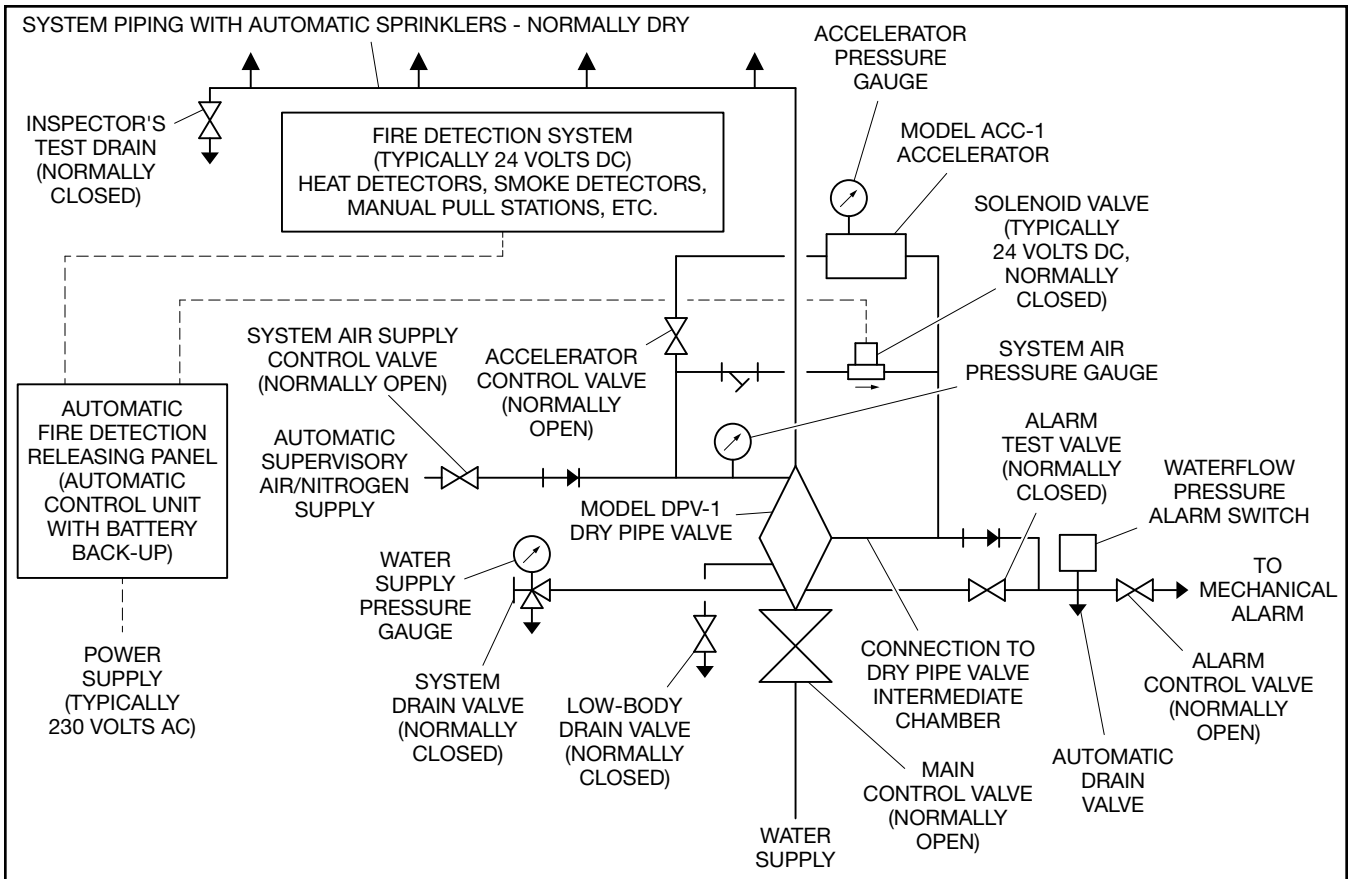

FIGURE 1
MODEL DPV-1 PREACTION TYPE B VALVE
FUNCTIONAL SYSTEM SCHEMATIC

Operation by a Fire Detection System

When the fire detection system as shown in Figure 1 responds to a fire, the automatic fire detection releasing panel energizes the solenoid valve. Opening of the solenoid valve allows system air pressure to be transmitted to the intermediate chamber of the dry pipe valve which neutralizes the differential pressure holding the dry pipe valve closed.

Water pressure overcomes the differential holding the clapper assembly closed and the clapper assembly swings clear of the water seat, as shown in Figure 3C. This action permits water flow into the system piping and subsequently to be discharged from any open sprinklers. Also, with the clapper assembly opened the intermediate chamber is pressurized and water flows through the alarm port (see Figure 3B) at the rear of the preaction type B valve. As the flow through the alarm port exceeds the drain capacity of the automatic drain valve, the alarm line is pressurized to actuate system water flow alarms.

After a valve actuation and upon subsequent closing of a system main control valve to stop water flow, the clapper assembly will latch open as shown in Figure 3D. Latching open of the preaction type B valve will permit complete draining of the system (including any loose scale) through the main drain port.

During the valve resetting procedure and after the system is completely drained, the external reset knob can be easily depressed to externally unlatch the clapper assembly as shown in Figure 3E. As such, the clapper assembly is returned to its normal set position to facilitate setting of the dry pipe sprinkler system without having to remove the handhole cover.

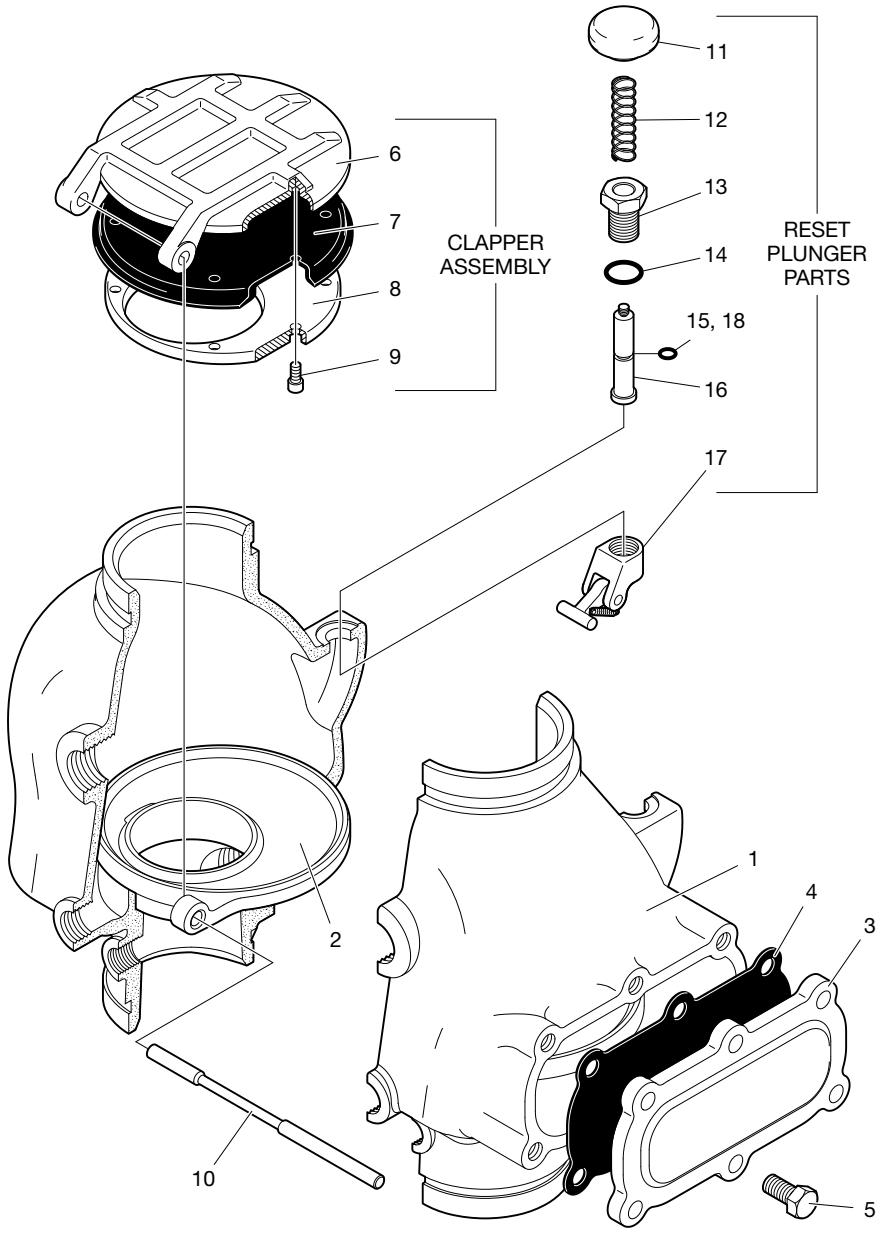

NO.	DESCRIPTION	QTY.	REP. PART
1	Valve Body	1	NR
2	Air and Water Seat	1	NR
3	Handhole Cover	1	NR
4	Handhole Cover Gasket	1	See (b)
5	Hex Head Cap Screw 1/2-13 UNC x 1"	6	CH
6	Clapper	1	See (a)
7	Clapper Facing	1	See (a) or (b)
8	Clapper Facing Retaining Plate	1	See (a)
9	Socket Head Cap Screw 1/4-20 UNC x 1/2"	7	See (a)
10	Clapper Hinge Pin	1	See (a)
11	Reset Knob	1	See (c)
12	Reset Spring	1	See (c)
13	Reset Bushing	1	See (c)
14	Reset Bushing O-Ring	1	See (b) or (c)
15	Reset Plunger O-Ring	1	See (b) or (c)
16	Reset Plunger	1	See (c)
17	Reset Latch Subassembly	1	See (c)
18	Dow Corning FS3452 Flourosilicone Grease, 1.5 g	1	See (b) or (c)

NR: Not Replaceable
CH: Common Hardware

REPLACEMENT PARTS		
NO.	DESCRIPTION	P/N
(a)	Clapper Assembly Includes Items 6-10	92-309-2-403
(b)	Repair Parts Kit Includes Items 4, 7, 14, 15, & 18	92-309-1-404
(c)	Reset Plunger Parts Kit Includes Items 11-18	92-310-1-405

FIGURE 2 (1 OF 2)
DN100 MODEL DPV-1 DRY PIPE VALVE ASSEMBLY

NO.	DESCRIPTION	QTY.	REP. PART
1	Valve Body	1	NR
2	Air and Water Seat	1	NR
3	Water Seal O-Ring	1	NR
4	Air Seal O-Ring	1	NR

NO.	DESCRIPTION	QTY.	REP. PART
5	Socket Head Cap Screw 3/8-16 UNC x 1"	8	NR
6	Handhole Cover	1	NR
7	Handhole Cover Gasket	1	See (b)

NO.	DESCRIPTION	QTY.	REP. PART
8	Hex Head Cap Screw 5/8-11 UNC x 1"	6	CH
9	Clapper	1	See (a)
10	Clapper Facing	1	See (a) or (b)
11	Clapper Facing Retaining Plate	1	See (a)
12	Socket Head Cap Screw 1/4-20 UNC x 1/2"	9	See (a)
13	Clapper Hinge Pin	1	See (a)
14	Reset Knob	1	See (c)
15	Reset Spring	1	See (c)
16	Reset Bushing	1	See (c)
17	Reset Bushing O-Ring	1	See (b) or (c)
18	Reset Plunger O-Ring	1	See (b) or (c)
19	Reset Plunger	1	See (c)
20	Reset Latch Subassembly	1	See (c)
21	Dow Corning FS3452 Flourosilicone Grease, 1.5 g	1	See (b) or (c)

NR: Not Replaceable
CH: Common Hardware

REPLACEMENT PARTS

NO.	DESCRIPTION	P/N
(a)	Clapper Assembly Includes Items 9-13	92-309-2-603
(b)	Repair Parts Kit Includes Items 7, 10, 17, 18, 21	92-309-1-604
(c)	Reset Plunger Parts Kit Includes Items 14-21	92-310-1-405

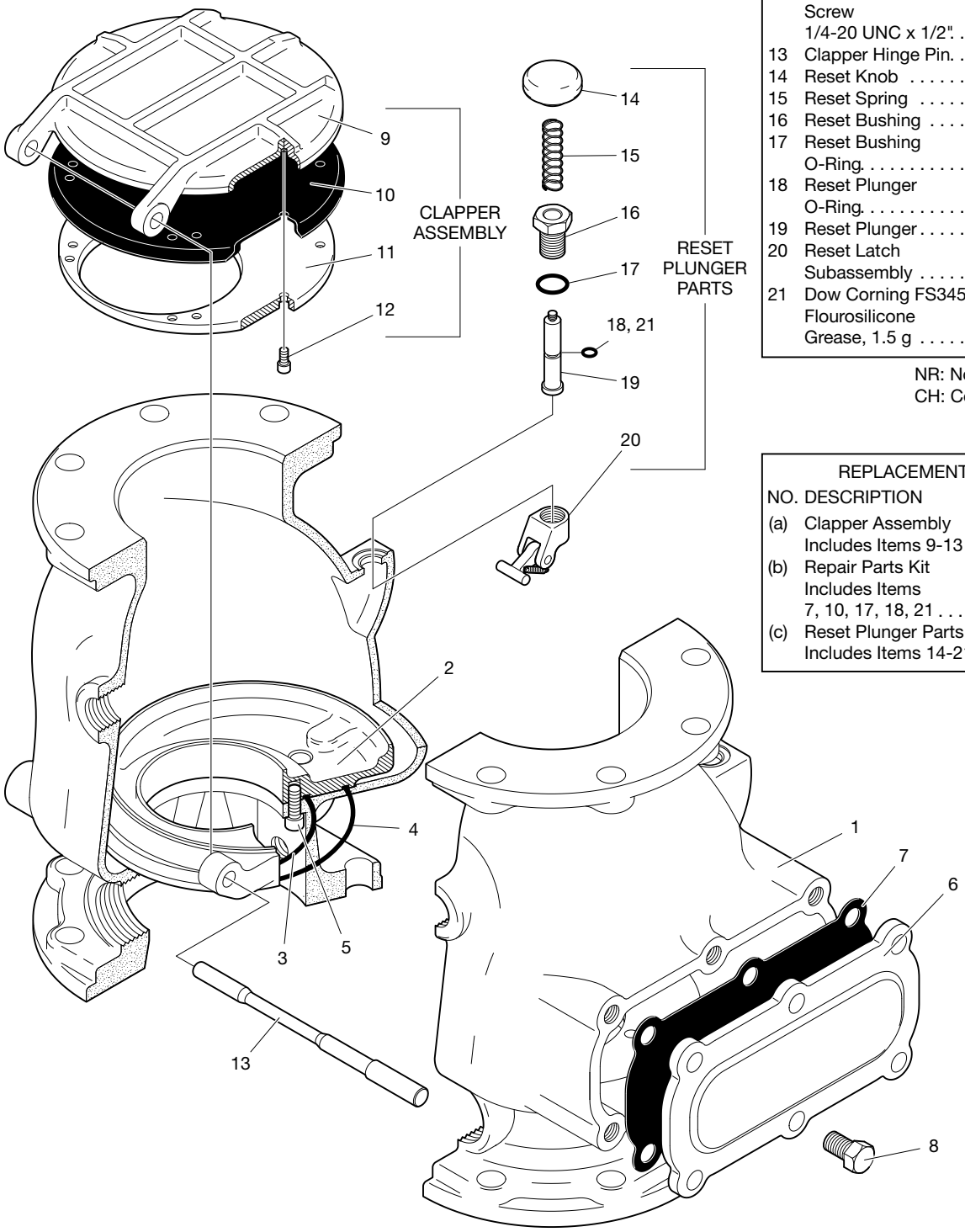

FIGURE 2 (2 OF 2)
DN150 MODEL DPV-1 DRY PIPE VALVE ASSEMBLY

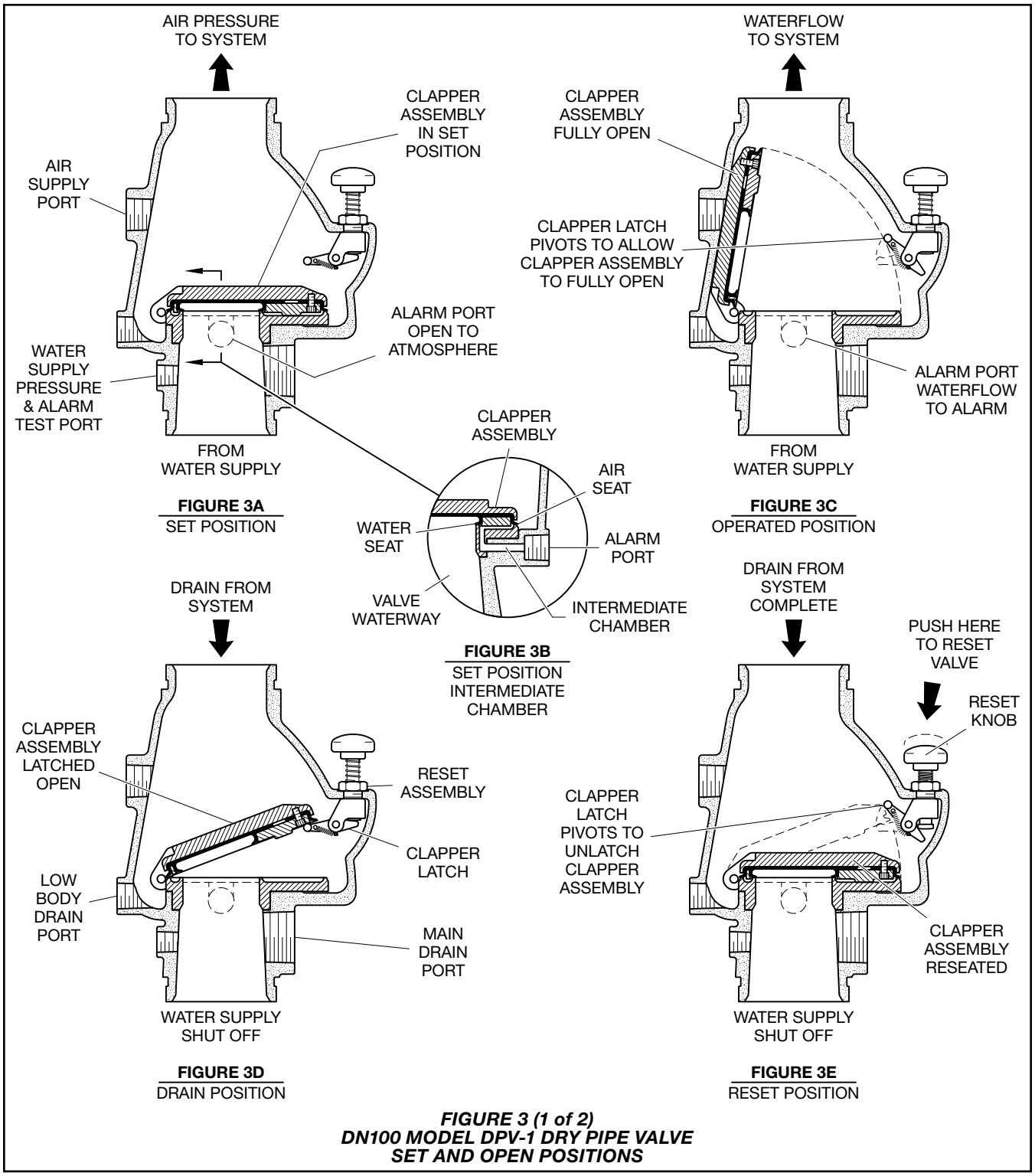

FIGURE 3 (1 of 2)
DN100 MODEL DPV-1 DRY PIPE VALVE
SET AND OPEN POSITIONS

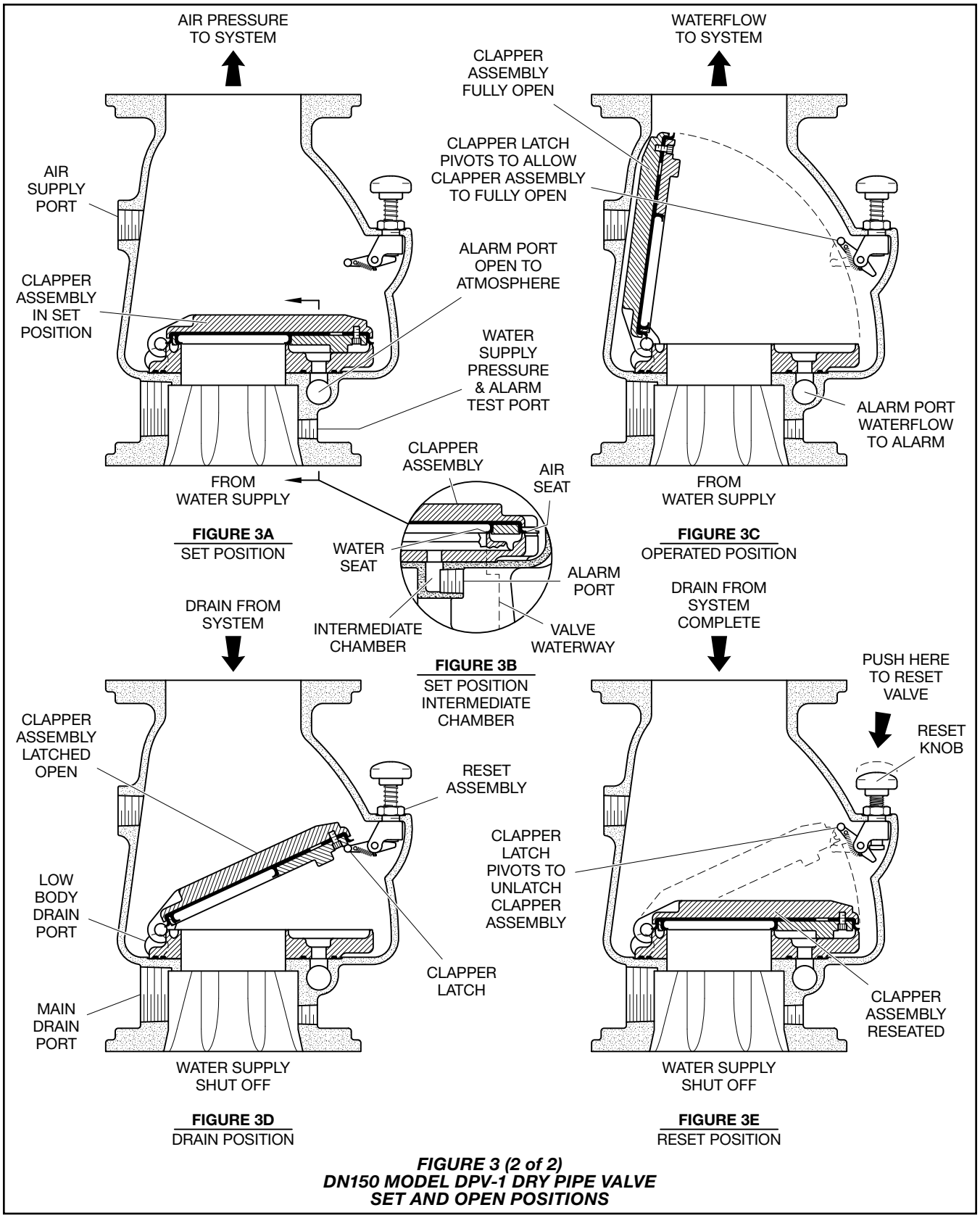

FIGURE 3 (2 of 2)
DN150 MODEL DPV-1 DRY PIPE VALVE
SET AND OPEN POSITIONS

No.	Description	Qty.	P/N
1	Base	1	NR
2	Cover	1	NR
3	Upper Diaphragm Plate	1	See (c)
4	Pivot Plate Assembly	1	See (b)
4a	Spirol Pin	1	
4b	Pivot Plate	1	
5	Plunger	1	See (a)
5a	Pan Hd. Machine Screw	1	
5b	Upper Diaphragm Retaining Ring	2	
5c	Upper Diaphragm	1	
5d	Jam Nut	1	
6	Exhaust Valve	1	See (a)
6a	Upper Plug	1	
6b	Washer	1	
6c	Lower Diaphragm	1	
6d	Lower Plug	1	
6e	O-Ring*	1	
6f	O-Ring Retainer	1	
6g	Exhaust Valve Screw	1	
7	Rd. Head Machine Screw 1/4˝-20 UNC x 5/8˝	6	See (c)
8	Cover Gasket	1	See (a)
9	Vent Plug	1	See (c)
10	O-Ring*	1	See (a)
11	Restriction	1	See (a)
12	Restriction Access Plug	1	See (c)
13	Pan Hd. Machine Screw 10-32 UNF x 5/8˝	4	See (b)
14	Cotter Pin	1	See (b)
15	Lever	1	See (b)
16	Retaining Ring	1	See (b)
17	Anti-Flood Valve	1	See (b)
18	Relief Valve	1	See (b)
19	Spring	1	See (b)
20	Relief Valve Seat	1	See (b)
21	O-Ring*	1	See (b)
22	Seal Washer	1	See (b)
23	Latch	1	See (a)
24	Fillerster Hd. Machine Screw 1/4”-20 UNC x 1-1/2˝	8	See (c)
25	Plug Seat	1	See (c)
26	O-Ring*	1	See (c)
27	O-Ring*	1	See (a)
28	Reset Knob	1	See (c)
29	Anti-Flood Seat Assembly w/Ball Float	1	See (b)
29a	Insert	1	
29b	Seal	1	
29c	Guide	1	
29d	Ball	1	
29e	Clip	1	
29f	O-Ring*	1	

* Requires thin film of FS3452 Fluorosilicone Grease
NR – Not Replaceable

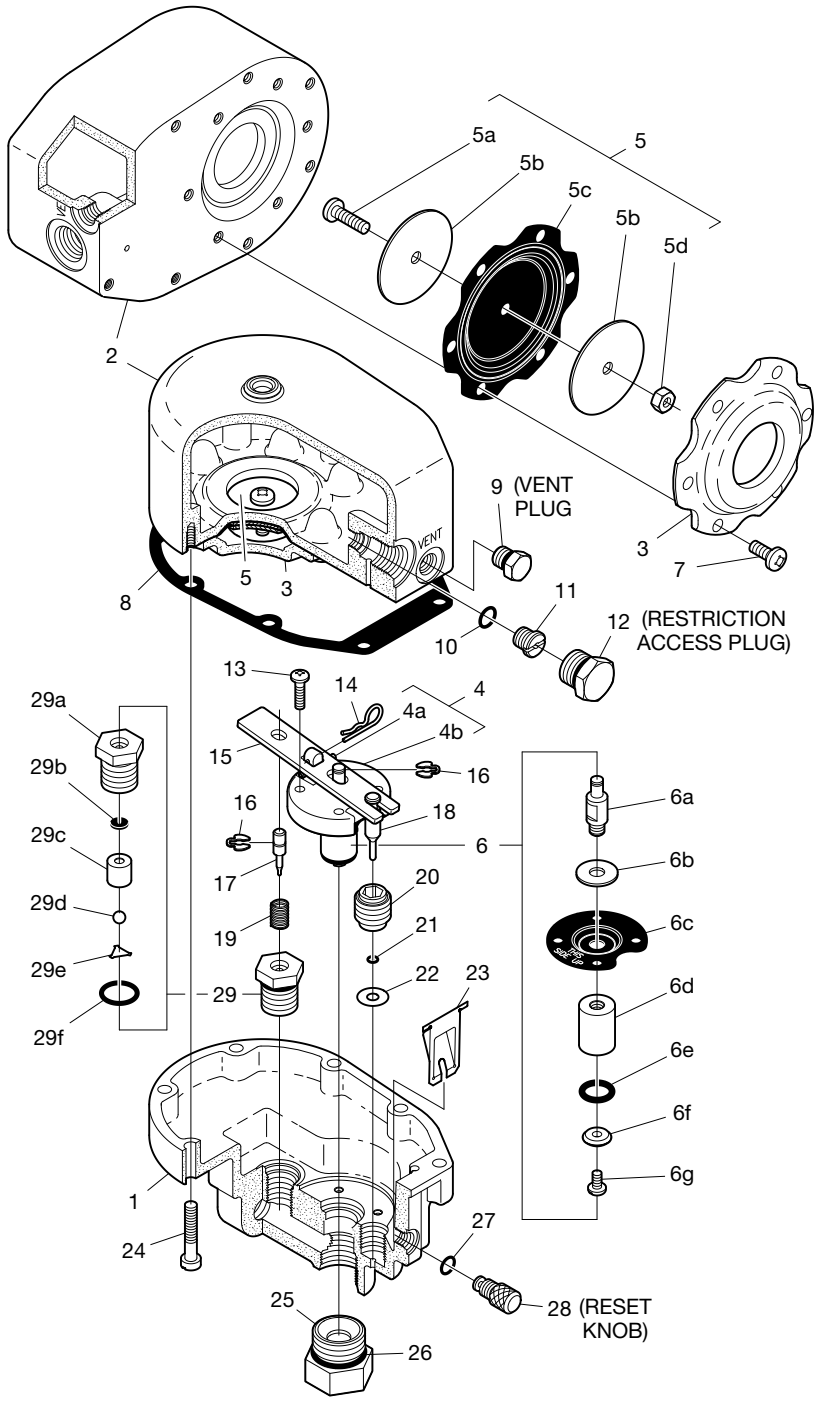

Kit	Description	P/N
Repair Parts Kit (a)	Includes Items 5, 6, 8, 10, 11, 23, 27 & 1.5 grams of FS3452	92-311-1-116
Replacement Parts Kit (b)	Include Items 4, 13-22, 29 & 1.5 grams of FS3452	92-311-1-117
Replacement Parts Kit (c)	Includes Items 3, 7, 9, 12, 24-26, 28, & 1.5 grams of FS3452	92-311-1-118

FIGURE 4
MODEL ACC-1 DRY PIPE VALVE ACCELERATOR ASSEMBLY

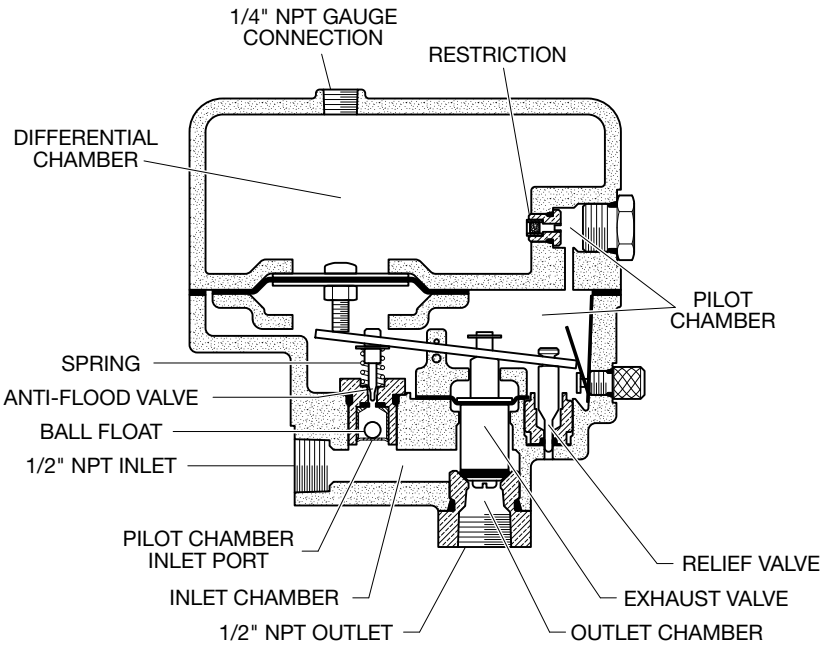

FIGURE 5
MODEL ACC-1 DRY PIPE VALVE ACCELERATOR
IN SET POSITION

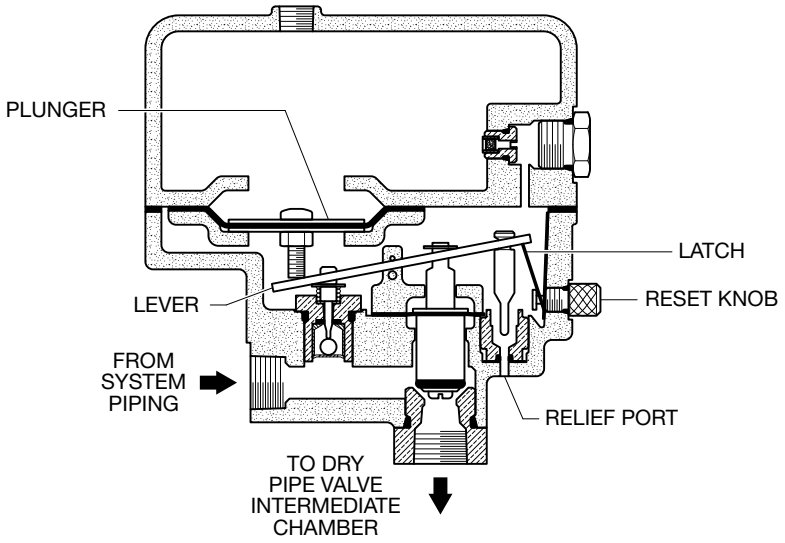

FIGURE 6
MODEL ACC-1 DRY PIPE VALVE ACCELERATOR
IN TRIPPED POSITION

NO.	DESCRIPTION	QTY
1	Copper Tube, 15 x 1 mm, Type D; P/N WS00000086	1
2	Copper Tube, 15 x 1 mm, Type C; P/N WS00000083	1
3	Copper Tube, 15 x 1 mm, Type B; P/N WS00000082	1
4	Copper Pipe, 6 mm x 1 m; P/N WS00000008	1
5	Hose, 3 x 6mm, 1.2m; P/N WS00000004	2
6	Check Valve, 1/2" NPT; P/N V923221002	1
7	Union, DN15 x DN15; P/N UTDMDFN	3
8	Tee, DN15 x DN15 x DN15; P/N TTDMDDFN	5
9	Tee, DN15 x DN15 x DN15; P/N TTDDMDFN	1
10	Tee, DN15; P/N TTDDDFN	2
11	Reducer, DN20 x DN15; P/N RTEMDFN	1
12	Reducer, DN15 x DN20; P/N RTDMEFN	1
13	Reducer, DN15 x DN8; P/N RTDMBFN	3
14	Plug, DN15; P/N PTDN	1
15	Manifold, 1" x 1/2"; P/N MANIF3WAY	1
16	Elbow, DN20 x DN20; P/N ETEMEFN	2
17	Elbow, DN15 x DN15; P/N ETDMDFN	6
18	Adapter Elbow, 15 mm x DN15; P/N ETDMCON	1
19	Elbow, DN15 x DN15; P/N ETDDFN	2
20	Compression Fitting, DN15 x 15mm; P/N ATDMCON	4
21	Adapter Compression Fitting, DN15 x 15mm; P/N ATDFCON	1
22	Adapter, DN15 x DN15; P/N ATDDMN	5
23	Pipe Nipple, 1" x 80mm; P/N AP80F2	1
24	Pipe Nipple, 1/2" x 60mm; P/N AP60D2	6

NO.	DESCRIPTION	QTY
25	Pipe Nipple, 1/2" x 40mm; P/N AP40D2	1
26	Pipe Nipple, 1/2" x 150mm; P/N AP150D2	1
27	Pipe Nipple, 3/4" x 140mm; P/N AP140E2	1
28	Pipe Nipple, 2" x 120mm; P/N AP120I2	1
29	Plug, 3/4"; P/N A291E2	1
30	Nipple Fitting, 2"; P/N A280I2	1
31	Reducing Tee, 2" x 2" x 1/2"; P/N A130RIID2	1
32	Air Pressure Gauge, 250 PSI; P/N 923431012	2
33	Fitting, Anti-Flood, 3/32"; P/N 920321002	1
34	Ball Valve, DN15, Venthole M5; P/N 59304FO	2
35	Dry Pipe Accelerator, ACC-1; P/N 523111001	1
36	Dry Pipe Valve, DPV-1, G x G, 4"/114.3mm; P/N 523131940	1
37	Solenoid Valve, 24 VDC, 1/2" NPT, 5-300 PSI / 0.3-20.7 bar; P/N 522871124P	1
38	Elbow, WES 3mm x M5; P/N 406012	2
39	Check Valve; DN15 x DN15, <10 Bar; P/N 305105	1
40	Strainer, 1/2", PN20; P/N 305003	1
41	Drain Valve, Self-Closing, 1/2" NPT; P/N 2162156	1
42	Ball Valve, DN50; P/N 1610000600	1
43	Ball Valve, DN20; P/N 1610000270	1
44	Ball Valve, DN15; P/N 1610000210	4
45	Pressure Switch, Model PS10-2; P/N 0260	1
46	Water Pressure Gauge, 300 PSI/21 bar; P/N 025500013	1

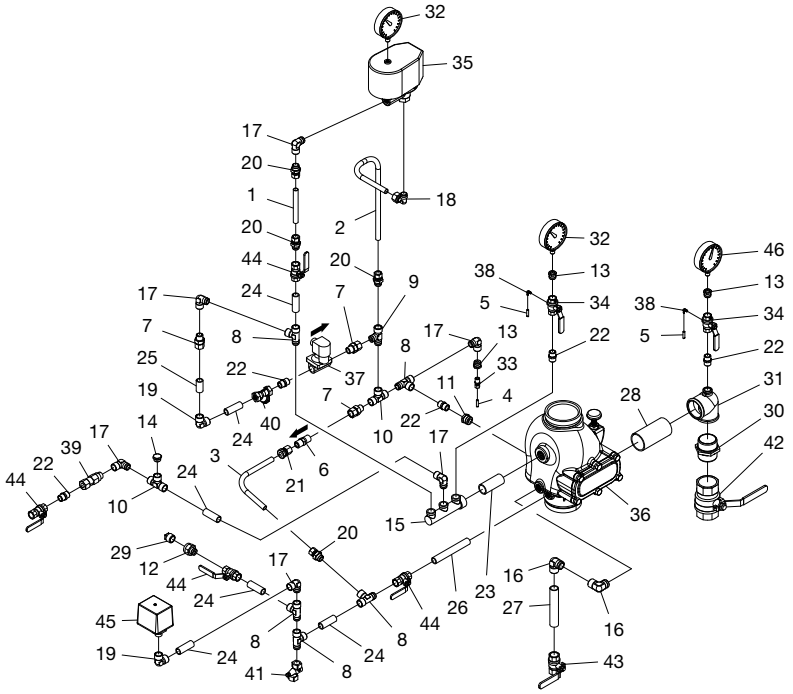

FIGURE 7
DN100 MODEL DPV-1 PREACTION TYPE B TRIM ASSEMBLY
EXPLODED VIEW

NO.	DESCRIPTION	QTY
1	Copper Tube, 15 x 1 mm; P/N WS00000125	1
2	Copper Tube, 15 x 1 mm, Type B; P/N WS00000088	1
3	Copper Tube, 15 x 1 mm, Type D; P/N WS00000086	1
4	Copper Pipe, 6 mm x 1 m; P/N WS00000008	1
5	Hose, 3 x 6mm, 1.2m; P/N WS00000004	2
6	Check Valve, 1/2" NPT; P/N V923221002	1
7	Union, DN15 x DN15; P/N UTDMDFN	2
8	Tee, DN15 x DN15 x DN15; P/N TTDMDDFN	5
9	Tee, DN15 x DN15 x DN15; P/N TTDDMDFN	1
10	Tee, DN15; P/N TTDDDFN	2
11	Reducer, DN15 x DN20; P/N RTDMEFN	2
12	Reducer, DN15 x DN8; P/N RTDMBFN	3
13	Plug, DN15; P/N PTDN	1
14	Manifold, 1" x 1/2"; P/N MANIF3WAY	1
15	Elbow, DN20 x DN20; P/N ETEMEFN	1
16	Elbow, DN20 x DN20; P/N ETEEMN	1
17	Elbow, DN15 x DN15; P/N ETDMDFN	8
18	Adapter Elbow, 15 mm x DN15; P/N ETDMCON	1
19	Elbow, DN15 x DN15; P/N ETDDFN	1
20	Compression Fitting, DN15 x 15mm; P/N ATDMCON	4
21	Adapter Compression Fitting, DN15 x 15mm; P/N ATDFCON	1
22	Adapter, DN15 x DN15; P/N ATDDMN	3
23	Pipe Nipple, 1/2" x 60mm; P/N AP60D2	6
24	Pipe Nipple, 1/2" x 150mm; P/N AP150D2	1

NO.	DESCRIPTION	QTY
25	Pipe Nipple, 3/4" x 140mm; P/N AP140E2	1
26	Pipe Nipple, 1/2" x 120mm; P/N AP120D2	1
27	Pipe Nipple, 2" x 120mm; P/N AP120I2	1
28	Pipe Nipple, 1" x 100mm; P/N AP100F2	1
29	Plug, 3/4"; P/N A291E2	1
30	Nipple Fitting, 2"; P/N A280I2	1
31	Reducing Tee, 2" x 2" x 1/2"; P/N A130RIID2	1
32	Air Pressure Gauge, 250 PSI; P/N 923431012	2
33	Fitting, Anti-Flood, 3/32"; P/N 920321002	1
34	Ball Valve, DN15, Venthole M5; P/N 59304FO	2
35	Dry Pipe Accelerator, ACC-1; P/N 523111001	1
36	Dry Pipe Valve, DPV-1, G x G, 6"/168.3mm; P/N 523131960	1
37	Solenoid Valve, 24 VDC, 1/2" NPT, 5-300 PSI / 0.3-20.7 bar; P/N 522871124P	1
38	Elbow, WES 3mm x M5; P/N 406012	2
39	Check Valve; DN15 x DN15, <10 Bar; P/N 305105	1
40	Strainer, 1/2", PN20; P/N 305003	1
41	Drain Valve, Self-Closing, 1/2" NPT; P/N 2162156	1
42	Ball Valve, DN50; P/N 1610000600	1
43	Ball Valve, DN20; P/N 1610000270	1
44	Ball Valve, DN15; P/N 1610000210	4
45	Pressure Switch, Model PS10-2; P/N 0260	1
46	Water Pressure Gauge, 300 PSI/21 bar; P/N 025500013	1

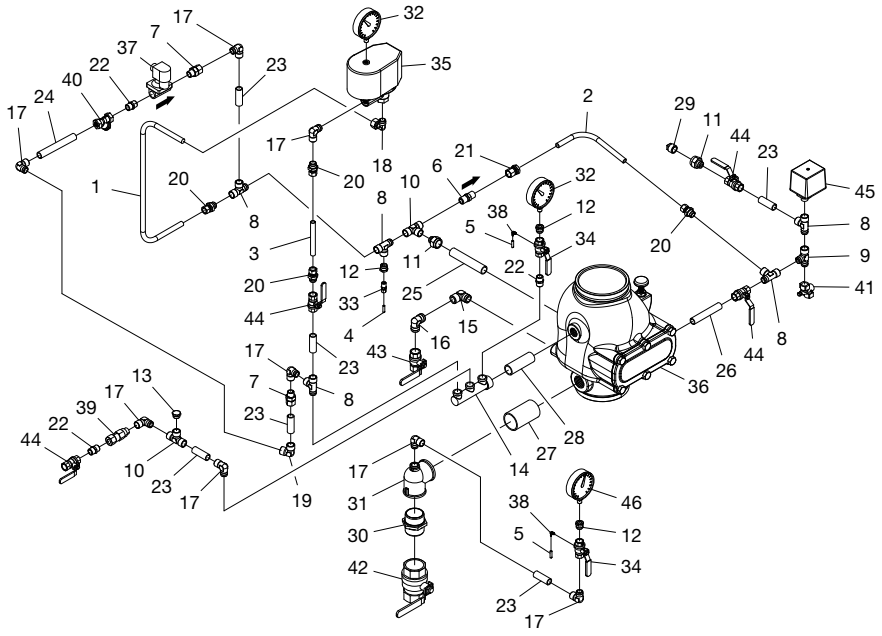

FIGURE 8
DN150 MODEL DPV-1 PREACTION TYPE B TRIM ASSEMBLY
EXPLODED VIEW

Operation by One or More Sprinklers

When one or more automatic sprinklers operate in response to a fire, air pressure within the system piping is relieved through the open sprinklers resulting in a rapid and steady drop in system air pressure.

With a rapid and steady drop in system pressure at the dry pipe valve acceleration inlet and pilot chamber (see Figure 5), the pressure in the differential chamber reduces at a substantially lower rate. This condition creates a net downward force on the plunger which rotates the lever. As the lever is rotated (see Figure 6), the relief valve is raised out of the relief port and the anti-flood valve is depressed downward into the pilot chamber inlet port, venting the pilot chamber.

The system pressure in the inlet chamber then forces (raises) the exhaust valve off its seat. This continues the rotation of the lever into the tripped (latched) position as shown in Figure 6. As the exhaust valve is raised off its seat, system pressure is transmitted to the intermediate chamber of the dry pipe valve which neutralizes the differential pressure holding the valve closed.

Water pressure overcomes the differential holding the clapper assembly closed and the clapper assembly swings clear of the water seat, as shown in Figure 3C. This action permits water flow into the system piping and subsequently to be discharged from any open sprinklers. Also, with the clapper assembly open, the intermediate chamber is pressurized and water flows through the alarm port (see Figure 3B) at the rear of the DPV-1 valve. As the flow through the alarm port exceeds the drain capacity of the automatic drain valve, the alarm line is pressurized to actuate system water flow alarms.

After a valve actuation and upon subsequent closing of a system main control valve to stop water flow, the clapper assembly will latch open as shown in Figure 3D. Latching open of the DPV-1 valve will permit complete draining of the system (including any loose scale) through the main drain port.

Nominal Valve Size	Nominal Dimensions, (mm)						
	A	B*	C*	D	E*	F*	G
DN100	349	507	376	150	193	490	137
DN150 (165,1 mm)	406	509	375	184	211	475	135
DN150 (168,3 mm)	406	509	375	184	211	475	135

** Minimum Clearance*

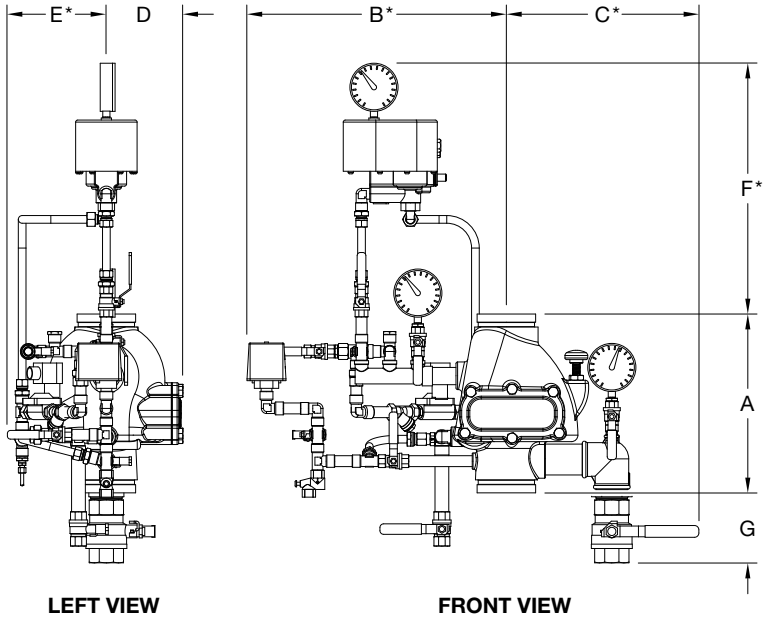

FIGURE 9
MODEL DPV-1 PREACTION TYPE B VALVE
NOMINAL INSTALLATION DIMENSIONS

During the valve resetting procedure and after the system is completely drained, the external reset knob can be easily depressed to externally unlatch the clapper assembly as shown in Figure 3E. The clapper assembly is returned to its normal set position to facilitate setting of the dry pipe sprinkler system, without having to remove the handhole cover.

The rate-of-flow through the restriction (see Figure 5) has been set such that the Model ACC-1 Accelerator provides the maximum practical sensitivity to a loss in system pressure due to a sprinkler operation while still being capable of automatically compensating for normal variations in system pressure such as are caused by environmental temperature changes. A test for verifying that the rate-of-flow through the restriction is within the range for optimum accelerator performance is given in the Valve Setting Procedure section.

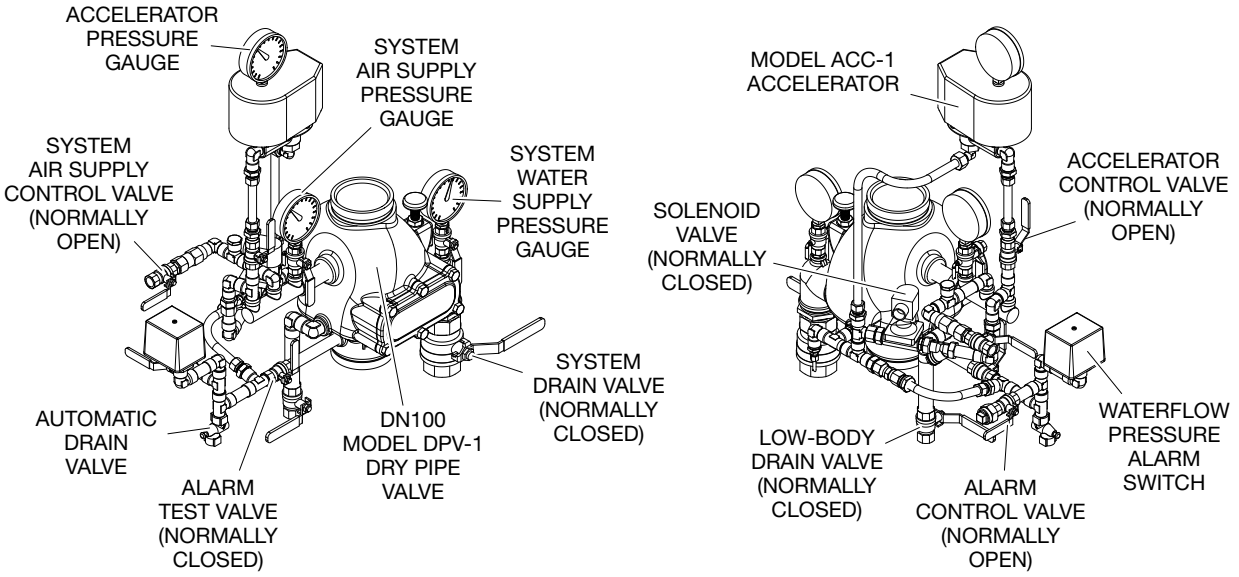

FIGURE 10 (1 OF 2)
DN100 MODEL DPV-1 PREACTION TYPE B VALVE
TRIM ASSEMBLY COMPONENTS

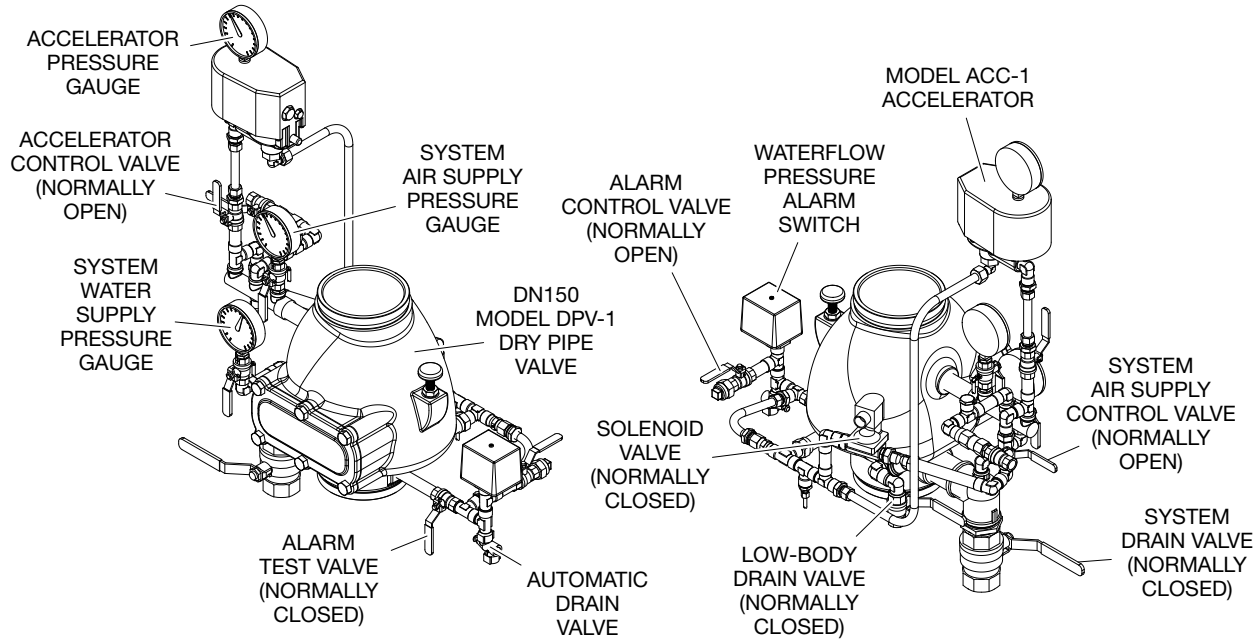

FIGURE 10 (2 OF 2)
DN150 MODEL DPV-1 PREACTION TYPE B VALVE
TRIM ASSEMBLY COMPONENTS

Installation

TYCO Model DPV-1 Preaction Type B Valves are to be installed in accordance with this section.

Alteration of the trim may prevent the DPV-1 valves from functioning properly, as well as void approvals and the manufacturer's warranties.

Failure to latch open the clapper assembly prior to a system hydrostatic test may result in damage to the clapper assembly.

The DPV-1 valve must be installed in a readily visible and accessible location.

The DPV-1 valve and associated trim must be maintained at a minimum temperature of 4°C.

NOTICE

Heat tracing of the Model DPV-1 Preaction Type B Valve or its associated trim is not permitted. Heat tracing can result in the formation of hardened mineral deposits that are capable of preventing proper operation.

Step 1. The DPV-1 valve must be installed with factory assembled trim.

Step 2. Suitable provision must be made for disposal of drain water. Drainage water must be directed such that it will not cause accidental damage to property or danger to persons.

Step 3. Installation of an air maintenance device, as described in the Technical Data section, is recommended.

Step 4. An inspector's test connection must be provided on the system piping at the most remote location from the DPV-1 valve.

Step 5. Conduit and electrical connections are to be made in accordance with the requirements of the authority having jurisdiction.

Step 6. Before a system hydrostatic test is performed in accordance with the standards recognized by the approval agency, in addition to any other authorities having jurisdiction, the clapper assembly is to be manually latched open (see Figure 3D); the automatic drain valve (see Figures 1 and 10) is to be temporarily plugged; and, the handhole cover bolts are to be tightened using a cross-draw sequence.

Valve Setting Procedure

The following steps are to be performed when initially setting the TYCO Model DPV-1 Preaction Type B Valves, after an operational test of the fire protection system, or after system operation due to a fire.

Step 1. Close the main control valve, air supply control valve, and accelerator control valve.

Step 2. Open the main drain valve and all auxiliary drains in the system. Close the auxiliary drain valves after water ceases to discharge. Leave the main drain valve open.

Step 3. Reset the automatic fire detection releasing panel to de-energize and close the solenoid valve.

Step 4. Verify that the automatic drain valve has stopped draining to determine the DPV-1 valve is completely drained.

Step 5. As necessary, replace all sprinklers that have operated. Replacement sprinklers must be of the same type and temperature rating as those which have operated.

In order to prevent the possibility of a subsequent operation of an overheated solder type sprinkler, any solder type sprinklers which were possibly exposed to a temperature greater than their maximum rated ambient must be replaced.

Step 6. Push down on the reset knob as shown in Figure 3E to allow the clapper assembly to re-seat.

Step 7. Pressurize the system with air (or nitrogen) to 0,7 bar, and then individually open all auxiliary drain valves in the system piping to drain any remaining water in trapped sections. Close each drain valve as soon as water ceases to discharge. Also partially open the low body drain valve in the valve trim to assure that the riser is completely drained. Close the low body drain valve as soon as water ceases to discharge.

Step 8. Refer to Table A and then restore the system to the normal system air pressure as necessary to hold the DPV-1 valve closed.

Step 9. Verify that air is not discharging from the automatic drain valve.

The absence of air discharging from the automatic drain valve is an indication of a properly set air seat within the DPV-1 valve. If air is discharging, see the Automatic Drain Valve Inspection Procedure in the Care and Maintenance section to determine and correct the cause of the leakage problem.

Pressure, (bar)	Minimum, (sec.)	Maximum, (sec.)
1,4	24	160
1,7	18	116
2,1	15	92
2,8	10	60
3,5	8	48
4,1	6	36

TABLE B
DIFFERENTIAL CHAMBER FILL TIMES TO 0,7 BAR

Step 10. Reset the dry pipe valve accelerator in accordance with steps 10a through 10h:

Step 10a. While holding the plunger of the automatic drain valve depressed, open the accelerator control valve one-quarter turn and allow the water in the accelerator piping to blow out. After water spray stops discharging, close the accelerator control valve and then release the plunger.

Step 10b. Slowly remove the vent plug located in the front of the accelerator cover and bleed off any residual air pressure in the differential chamber.

Step 10c. Unscrew (counter-clockwise rotation) the knurled reset knob at the front of the accelerator until it resists further turning. A click, which is the sound of the lever snapping back into the set position, may be heard. Screw the reset knob back in until it is finger tight. Do not wrench on the reset knob, since damage may result. The reset knob will turn with finger torque only.

Step 10d. Replace the vent plug.

Step 10e. Verify that the system air pressure has returned to normal.

Step 10f. Note how long it takes for the pressure in the differential chamber of the accelerator to increase to 0,7 bar after the accelerator control valve is opened. The time should be within the range of values indicated in Table B for optimum performance of the accelerator.

If the time to pressurize the differential chamber to 0,7 bar is not within the range of values given in the Table B, then the accelerator control valve should be closed and the corrective procedure described in the Care and Maintenance Section of technical data sheet TFP1100 should be followed.

Step 10g. When the air pressure in the differential chamber of the accelerator is equal to that in the system, then the accelerator is set and ready for service.

Step 10h. Close the accelerator control valve and then slowly open the low body drain valve in the trim, to bleed off any excess water trapped above the dry pipe valve clapper. Close the low body drain valve, return the system pressure to its normal value, and then re-open the accelerator control valve.

Step 11. Partially open the main control valve. Slowly close the main drain valve as soon as water discharges from the drain connection.

Verify that there is not any water discharging from the automatic drain valve.

The absence of water discharging from the automatic drain valve is an indication of a properly set water seat within the DPV-1 valve. If water is discharging, see the Automatic Drain Valve Inspection Procedure in the Care and Maintenance section to determine and correct the cause of the leakage problem.

If there are no leaks, the DPV-1 valve is ready to be placed in service and the main control valve must then be fully opened.

After setting a fire protection system, notify the proper authorities and advise those responsible for monitoring proprietary and/or central station alarms.

Step 12. Once a week after a valve is reset following an operational test or system operation, the low body drain valve (and any low point drain valves) should be partially opened (and then subsequently closed) to relieve drain-back water. Continue this procedure until drain-back water is no longer present.

Care and Maintenance

The following procedures and inspections should be performed as indicated, in addition to any specific requirements of any authority having jurisdiction. Impairments must be immediately corrected.

Before closing a fire protection system main control valve for maintenance work on the fire protection system that it controls, obtain permission to shut down the affected fire protection systems must first be obtained from the proper authorities and notify all personnel who may be affected by this decision must be notified.

The owner is responsible for the inspection, testing, and maintenance of their fire protection system and devices in compliance with this document, as well as with the applicable standards of any authority having jurisdiction. The installing contractor or product manufacturer should be contacted relative to any questions.

Automatic sprinkler systems are recommended to be inspected, tested, and maintained by a qualified inspection service.

The operational test procedure and waterflow pressure alarm test procedure will result in operation of the associated alarms. Consequently, notification must first be given to the owner and the fire department, central station, or other signal station to which the alarms are connected.

Annual Operation Test Procedure

Proper operation of the TYCO Model DPV-1 Preaction Type B Valve (that is, opening of the valve during a fire condition) should be verified at least once a year as follows:

Step 1. If water must be prevented from flowing beyond the riser, perform the following steps:

- Close the main control valve.
- Open the main drain valve.
- Open the main control valve one turn beyond the position at which water just begins to flow from the main drain valve.
- Close the main drain valve.

Step 2. Trip the DPV-1 valve by one of the following methods:

- Test the automatic fire detection releasing panel in accordance with the manufacturer's instructions to energize the solenoid valve.
- Open the system's inspector's test connection.

  Notes: *Be prepared to quickly perform steps 3, 4, and 5, if water must be prevented from flowing beyond the riser.*

  The method of trip testing is recommended to be alternated from year to year between testing of the automatic fire detection releasing panel and opening of the inspector's test connection.

Step 3. Verify that the DPV-1 valve has tripped, as indicated by the flow of water into the system.

Step 4. Close the system's main control valve.

Step 5. Close the air supply control valve.

Step 6. Reset the system in accordance with the Valve Setting Procedure.

Periodic Waterflow Alarm Test Procedure

Testing of the system waterflow alarms should be performed periodically based on the requirements of the authority having jurisdiction. To test the waterflow alarm, open the alarm test valve, to allow a flow of water to the waterflow pressure alarm switch and/or water motor alarm. Upon satisfactory completion of the test, close the alarm test valve.

Water Pressure Inspection Procedure

The water pressure gauge is to be inspected periodically based on the requirements of the authority having jurisdiction to ensure that normal system water pressure is being maintained.

Air Pressure Inspection Procedure

The air pressure gauge is to be inspected periodically based on the requirements of the authority having jurisdiction to ensure that normal system air pressure is being maintained.

Automatic Drain Valve Inspection Procedure

The automatic drain valve should be inspected periodically based on the requirements of the authority having jurisdiction by depressing the plunger and checking to ensure that the automatic drain valve is not discharging water and/or air. A discharge of water and/or air is an indication that the air and/or water seats are leaking, which could subsequently cause a false operation should the intermediate chamber become inadvertently pressurized.

If leakage is present, take the DPV-1 valve out of service (that is, close the main control valve, open the main drain valve, close the air supply control valve, remove the dry pipe valve accelerator from service, by closing the accelerator control valve, and open the inspector's test connection to relieve the system air pressure to 0 psig as indicated on the system air pressure gauge), and then after removing the handhole cover, perform the following steps:

Step 1. Make sure that the seat ring is clean and free of any nicks or significant scratches.

Step 2. Remove the clapper assembly from the valve by first pulling out the hinge pin.

Step 3. Disassemble the clapper facing retainer from the clapper so that the clapper facing can be removed and inspected. Make sure that the clapper facing does not show signs of compression set, damage, etc. Replace the clapper facing if there is any signs of wear.

Step 4. Clean the clapper facing, clapper, and clapper facing retainer, and then reassemble the clapper assembly.

Step 5. Reinstall the clapper assembly with its hinge pin and then reinstall the handhole cover.

Accelerator Inspection Procedure

The accelerator is recommended to be inspected periodically based on the requirements of the authority having jurisdiction to determine proper operation of the accelerator without having to trip the DPV-1 valve. This procedure must also be used whenever flooding the system would expose the water to freezing conditions.

Refer to technical data sheet TFP1112 for guidance with regard to trouble shooting of the TYCO Model ACC-1 Dry Pipe Valve Accelerator.

Step 1. Verify that the reset knob is screwed in.

Step 2. Close the system's main control valve and open the main drain valve to relieve the supply pressure to the dry pipe valve.

Step 3. Verify that the accelerator control valve is open.

Step 4. Open the inspector's test connection. Verify that the time to accelerator trip is essentially the same as in previous tests. A momentary burst of air from the automatic drain valve indicates that the accelerator has tripped.

As the system pressure is decreasing, check for any sign of water being discharged from the Accelerator Relief Port.

Step 5. Depress the plunger of the Automatic Drain Valve. A steady stream of exhausting air indicates that the Accelerator has properly latched in the Tripped position.

Step 6. Close the Accelerator Control Valve and the Inspector's Test Connection.

Step 7. After the system automatically restores itself to its normal air pressure, reset the Accelerator and Dry Pipe Valve in accordance with the steps 10 and 11 of the Valve Setting Procedure.

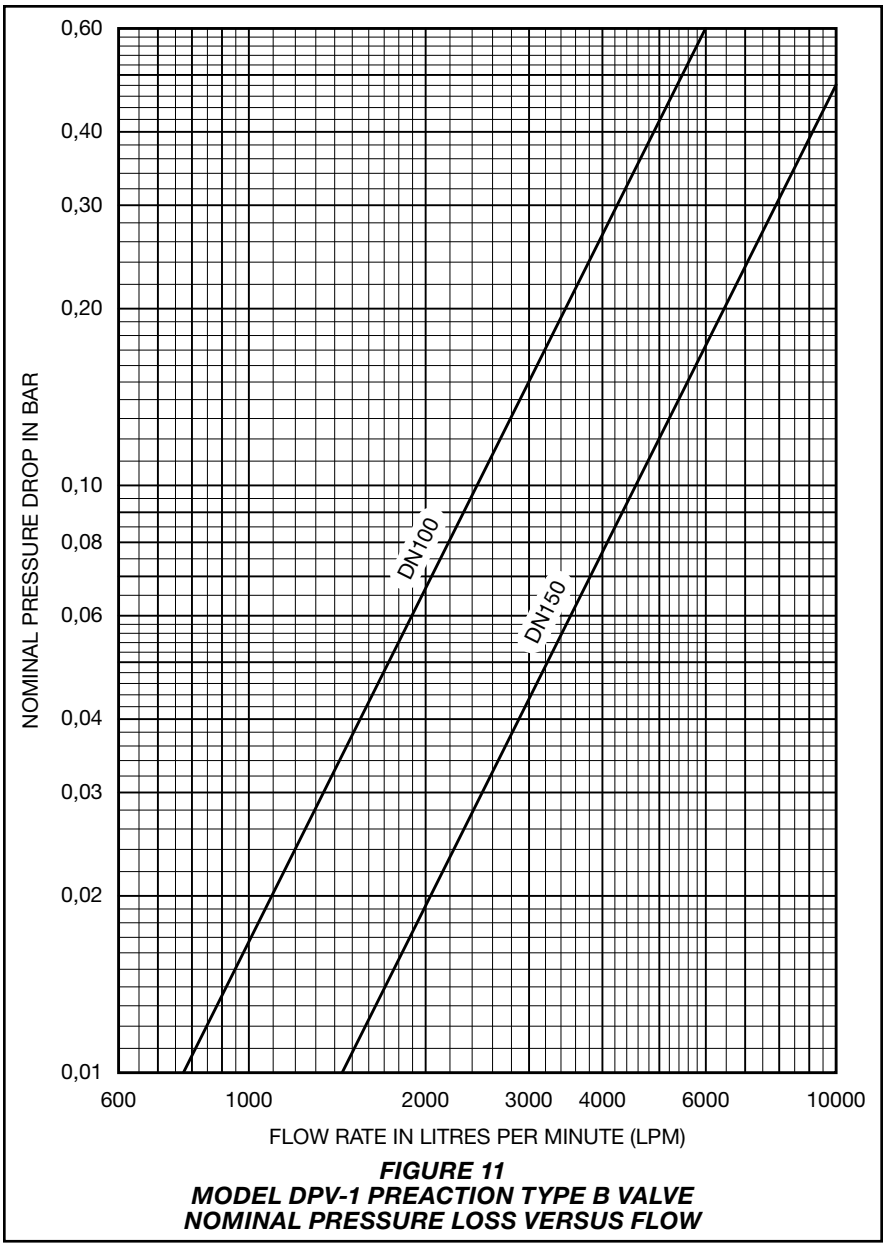

FIGURE 11
MODEL DPV-1 PREACTION TYPE B VALVE
NOMINAL PRESSURE LOSS VERSUS FLOW

Solenoid Valve Inspection Procedure

The solenoid valve is recommend to be inspected periodically based on the requirements of the authority having jurisdiction to determine proper operation of the solenoid valve without having to trip the DPV-1 valve. This procedure must also be used whenever flooding the system would expose the water to freezing conditions.

Refer to Technical Data Sheet TFP2180 for guidance with regard to trouble shooting of the solenoid valve.

Step 1. Close the system's main control valve, open the main drain valve to relieve the system pressure to the DPV-1 valve, and close the accelerator control valve.

Step 2. Test the automatic fire detection releasing panel in accordance with the manufacturer's instructions to energize the solenoid valve.

Step 3. Depress the plunger of the automatic drain valve. A steady stream of exhausting air indicates that the solenoid valve has opened.

Step 4. Reset the automatic fire detection releasing panel to de-energize and close the solenoid valve. After the system automatically restores itself to it's normal air pressure, open the accelerator control and reset the DPV-1 valve in accordance with step 11 of the Valve Setting Procedure.

P/N XX—X—XX—XX—X—XX

End Connection	
27	Flanged/Flanged, PN16
28	Flanged/Grooved, PN16
2B	Grooved/Grooved

Size	
4	DN100
6	DN150 168,3 mm
7	DN150 165,1 mm

Trim	
90	Preaction Type B*

* Preaction Type B in accordance with EN12845

Stop Valve	
00	Ordered Separately

Switch	
1	PS10-1

Accessories	
01	Trim with: Accelerator Accelerator Control Valve

TABLE C
MODEL DPV-1 PREACTION TYPE B VALVE PART NUMBER

Limited Warranty

For warranty terms and conditions, visit www.tyco-fire.com.

Ordering Procedure

Contact your local distributor for availability. When placing an order, indicate the full product name and part number (P/N).

Model DPV-1 **Dry Pipe Valve with Preaction Type B**
European Conformity Valve Trim
Specify: Fully Assembled ***Model DPV-1*** Preaction Type B Valve with Model ACC-1 Accelerator, P/N (specify from Table C)

FAST 2000/2
Compact Releasing Panel
Specify: Fast 2000/2 Compact Releasing Panel Programmed for Preaction Type B Systems

Accessories
Specify: Product Description (specify) and P/N (specify):

Supervisory Switch for
Accelerator Control Valve . . . . P/N CEDPV1ASS
Supervisory Switch for
Water Motor Alarm
Control Valve . . . . . P/N CEDPV1ASS
Air Pressure Relief Valve . . . . P/N 92-343-1-020
(factory-set at 3,1 bar)
Model WMA-1
Water Motor Alarm
w/Red Finish Gong . . . . . P/N 52-630-1-021
A-thru-Z Labels . . . . . P/N WS00000033
(for attaching to valve trim components)

1467 Elmwood Avenue, Cranston, RI 02910 | Telephone +1-401-781-8220

© 2024 Johnson Controls. All rights reserved. All specifications and other information shown were current as of document revision date and are subject to change without notice.

TEFLON is a trademark of The Chemours Company FC, LLC

Johnson Controls

Appendix A of TFP1486 JANUARY 2024
Summary Instructions (if problems occur, consult full document)
DN100, Model DPV-1 Preaction Type B Valve

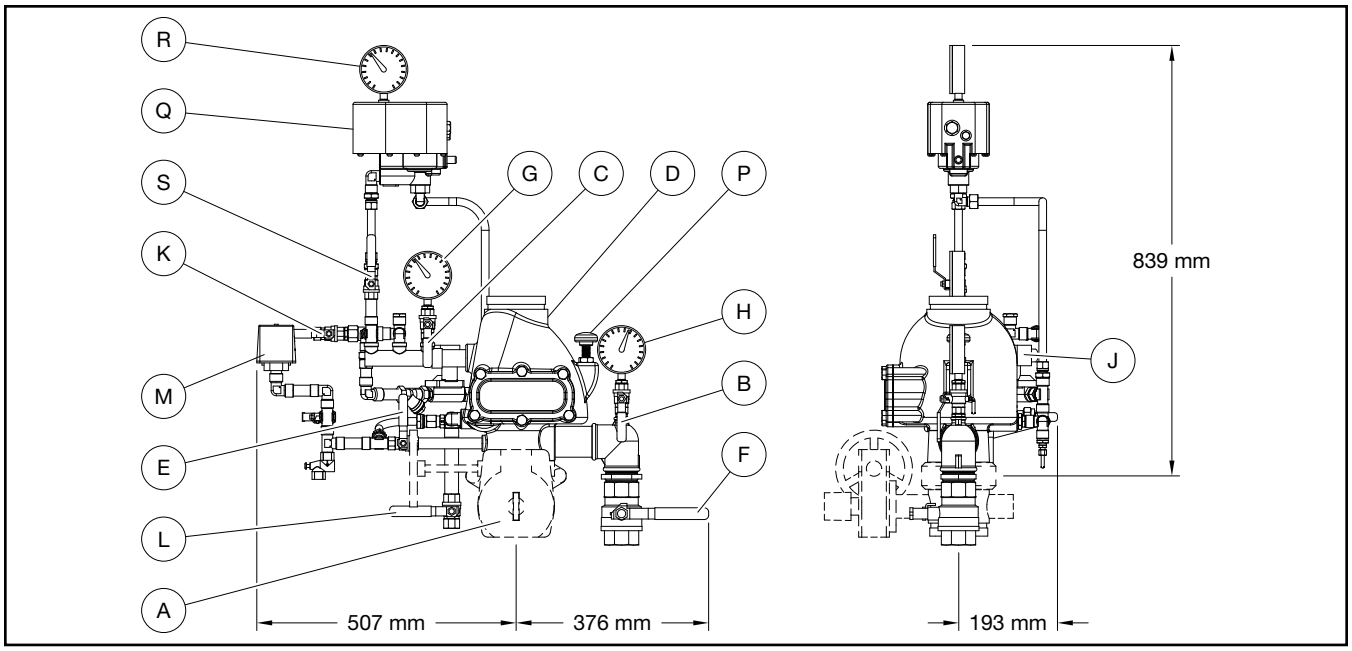

I. Normal Conditions

- The main control valve (A) is opened and locked, and the accelerator control valve (S) and air supply control valve (K) are open.
- The sprinkler system is filled with air and is pressurized.
- The main drain valve (F), and low body drain valve (L) are closed.
- The alarm test valve (E) is in the closed position.
- The pressure gauge valves (B) and (C) are open.
- The solenoid valve (J) is closed.
- The system air pressure gauge (G) reads downstream air pressure, the water supply pressure gauge (H) reads the upstream water pressure, and the accelerator air pressure gauge (R) reads the accelerator pressure.

II. Operation

Upon automatic fire detection, the solenoid valve (J) will open which results in opening of the dry pipe valve (D) to permit the system to be filled with water. Subsequently, upon sprinkler operation, water is discharged from any open sprinkler. Also, with the dry pipe valve open, water flows to actuate the waterflow pressure switch (M) and, as applicable, the water motor alarm.

-or-

When one or more sprinklers are activated, the accelerator (Q) operates to permit system air pressure into the dry pipe valve intermediate chamber. Doing so will immediately overcome the ability of the system air pressure to hold the dry pipe valve closed without having to wait for system air pressure to decay to approximately 20% of the water supply. The dry pipe valve immediately opens to permit water flow into the system piping and to be discharged from any open sprinklers. Also, with the dry pipe valve open, water flows to actuate the waterflow pressure alarm switch (M) and, as applicable, the water motor alarm.

III. Removing System from Service

Step 1. Close the main control valve (A), close the air supply control valve (K), and close the accelerator control valve (S).

Step 2. Drain the system with the main drain valve (F) and by opening all auxiliary drain valves in the system to make sure that cross-mains and branch lines are drained.

IV. Returning System to Service

Step 1. Close the auxiliary drain valves after water ceases to discharge, and leave the main drain valve (F) open.

Step 2. Replace the sprinklers that have operated and the sprinklers close to the fire.

Step 3. Push down on the reset knob (P) to allow the dry pipe valve (D) to re-seat.

Step 4. Reset the automatic fire detection system, which in turn will deenergize the solenoid valve (J) to reset the solenoid valve to a normally closed position.

Step 5. Via the air supply control valve (K), pressurize the system with air to 0,7 bar, and then open and close each auxiliary drain valve in the system piping to drain any remaining water in trapped sections. Also, partially open the low body drain valve (L) to assure that the riser is completely drained. Close the low body drain valve (L) as soon as water ceases to discharge.

Step 6. Open the air supply control valve (K) to restore the system to the normal system air pressure.

Step 7. Reset the accelerator (Q) using the instruction on its resetting label.

Step 8. Partially open the main control valve (A), and then slowly close the main drain valve (F).

Step 9. Fully open the main control valve (A) and lock it open.

Step 10. Reset the fire alarm panel and notify the central alarm station.

XI. Weekly Test

Note: *Prior to closing any valves or activating any alarms, notify local security guards and the central alarm station if applicable.*

Step 1. Open the alarm test valve (E), verify that the alarm signal created by the waterflow pressure alarm switch (M) is visible at the fire panel. If applicable, check the sound of the water motor alarm — it must be clear and steady.

Step 2. Close the alarm test valve (E), verify that the normal supply and system pressures are restored. If the supply pressure is below the normal, use the instructions from the water supply to obtain the usual pressure.

Appendix A of TFP1486 JANUARY 2024
Summary Instructions (if problems occur, consult full document)
DN150, Model DPV-1 Preaction Type B Valve

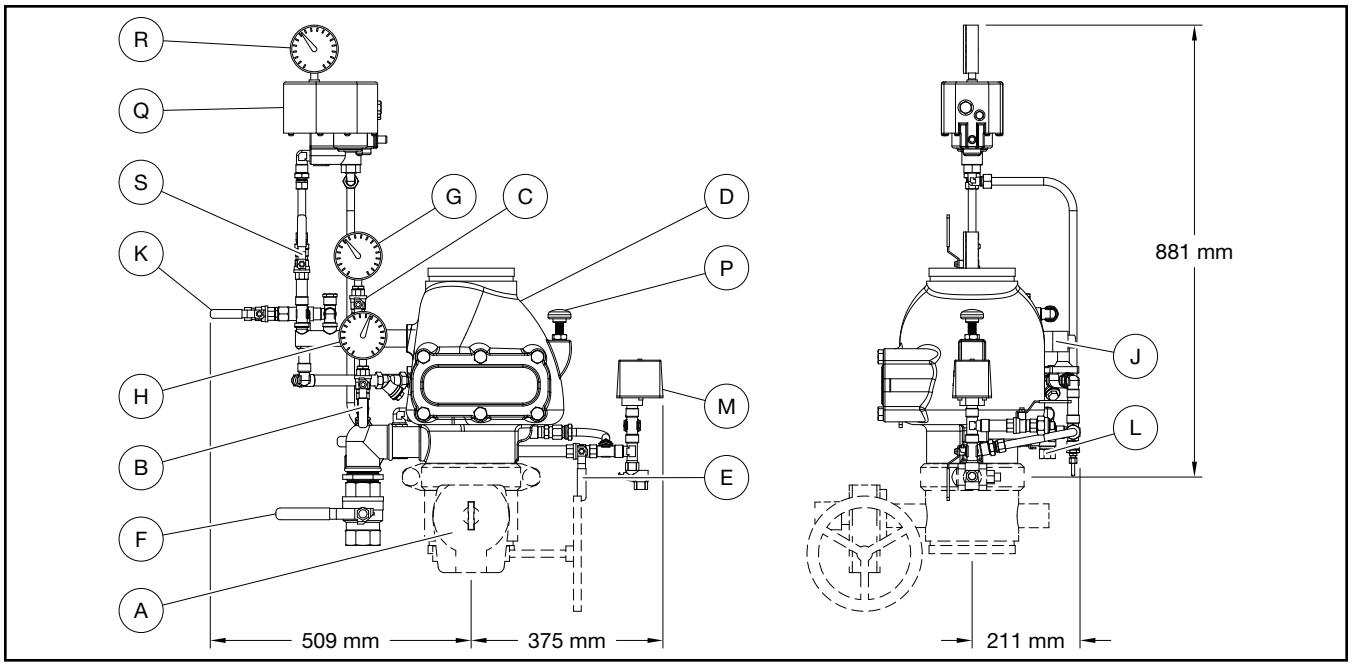

I. Normal Conditions

- The main control valve (A) is opened and locked, and the accelerator control valve (S) and air supply control valve (K) are open.
- The sprinkler system is filled with air and is pressurized.
- The main drain valve (F), and low body drain valve (L) are closed.
- The alarm test valve (E) is in the closed position.
- The pressure gauge valves (B) and (C) are open.
- The solenoid valve (J) is closed.
- The system air pressure gauge (G) reads downstream air pressure, thewater supply pressure gauge (H) reads the upstream water pressure, and the accelerator air pressure gauge (R) reads the accelerator pressure.

II. Operation

Upon automatic fire detection, the solenoid valve (J) will open which results in opening of the dry pipe valve (D) to permit the system to be filled with water. Subsequently, upon sprinkler operation, water is discharged from any open sprinkler. Also, with the dry pipe valve open, water flows to actuate the waterflow pressure switch (M) and, as applicable, the water motor alarm.

-or-

When one or more sprinklers are activated, the accelerator (Q) operates to permit system air pressure into the dry pipe valve intermediate chamber. Doing so will immediately overcome the ability of the system air pressure to hold the dry pipe valve closed without having to wait for system air pressure to decay to approximately 20% of the water supply. The dry pipe valve immediately opens to permit water flow into the system piping and to be discharged from any open sprinklers. Also, with the dry pipe valve open, water flows to actuate the waterflow pressure alarm switch (M) and, as applicable, the water motor alarm.

III. Removing System from Service

Step 1. Close the main control valve (A), close the air supply control valve (K), and close the accelerator control valve (S).

Step 2. Drain the system with the main drain valve (F) and by opening all auxiliary drain valves in the system to make sure that cross-mains and branch lines are drained.

IV. Returning System to Service

Step 1. Close the auxiliary drain valves after water ceases to discharge, and leave the main drain valve (F) open.

Step 2. Replace the sprinklers that have operated and the sprinklers close to the fire.

Step 3. Push down on the reset knob (P) to allow the dry pipe valve (D) to re-seat.

Step 4. Reset the automatic fire detection system, which in turn will deenergize the solenoid valve (J) to reset the solenoid valve to a normally closed position.

Step 5. Via the air supply control Valve (K), pressurize the system with air to 0,7 bar, and then open and close each auxiliary drain valves in the system piping to drain any remaining water in trapped sections. Also, partially open the low body drain Valve (L) to assure that the riser is completely drained. Close the low body drain valve (L) as soon as water ceases to discharge.

Step 6. Open the air supply control valve (K) to restore the system to the normal system air pressure.

Step 7. Reset the accelerator (Q) using the instruction on its resetting label.

Step 8. Partially open the main control valve (A), and then slowly close the main drain valve (F).

Step 9. Fully open the main control valve (A) and lock it open.

Step 10. Reset the fire alarm panel and notify the central alarm station.

XI. Weekly Test

Note: *Prior to closing any valves or activating any alarms, notify local security guards and the central alarm station if applicable.*

Step 1. Open the alarm test valve (E), verify that the alarm signal created by the waterflow pressure alarm switch (M) is visible at the fire panel. If applicable, check the sound of the water motor alarm — it must be clear and steady.

Step 2. Close the alarm test valve (E), verify that the normal supply and system pressures are restored. If the supply pressure is below the normal, use the instructions from the water supply to obtain the usual pressure.