DV-5A Red-E Cabinet
Integrated Preaction Fire Protection Package

IMPORTANT
Refer to Technical Data Sheet TFP2300 for warnings pertaining to regulatory and health information.

Scan the QR code or enter the URL in a web browser to access the most up-to-date electronic version of this document. Data rates may apply.

docs.jci.com/tycofire/tfp1401

General Description

The TYCO DV-5A Red-E Cabinet is a pre-assembled fire protection valve package enclosed within a free-standing cabinet designed to occupy minimal floor space and to provide an aesthetically pleasing enclosure for a fire protection valve riser. The entire package is pre-wired and the water inlet and outlets to the valve riser are grooved to provide minimal installation time. The valve package includes a system (manual) shut-off control valve, an automatic water control valve, and waterflow/supervisory switches. A built-in air compressor with associated controls provides an automatic air supply for use as either supervision and pneumatic actuation of the automatic water control valve.

Integral to the DV-5A Red-E Cabinet is a control panel and back-up batteries for providing electrical alarm, supervisory, and trouble functions. All switches within the cabinet are pre-wired to the control panel, making the electrical connections for power, detection circuits, and alarms the only remaining connections to complete the system.

In addition to the control panel being integral to the DV-5A Red-E Cabinet, windows are provided in the door for viewing the releasing panel functions and essential system pressure gauges. A lock for the control panel access door is standard, and a lock for the cabinet door is optional.

Features and benefits are as follows:

- Aesthetically pleasing appearance
- Professionally assembled
- Internally wired
- Custom manufactured
- All gauges and panel display are externally visible
- Industrial grade rollers (4) are standard at bottom of cabinet
- Forklift compatible
- Two-door cabinet design for ease of maintenance
- Internal, gauge panel, and control panel lighting
- Optional Model QRS-2 Electronic Accelerator for the 6 in. and 8 in. Double Interlock Electric/Electric Actuation system types
- Optional seismic kit

The DV-5A Red-E Cabinet is designed to readily incorporate 1-1/2 to 8 in. (DN40 to DN200) valve risers for the following types of preaction systems:

- Single Interlock Wet Pilot Actuation
- Single Interlock Dry Pilot Actuation
- Single Interlock Electric Actuation
- Double Interlock Electric/Pneumatic
- Double Interlock Electric/Electric
- Preaction Type A

NOTICE

The DV-5A Red-E Cabinets described herein must be installed and maintained in compliance with this document and with the applicable standards of the NATIONAL FIRE PROTECTION ASSOCIATION (NFPA), in addition to the standards of any authorities having jurisdiction. Failure to do so may impair the performance of these devices.



The owner is responsible for maintaining their fire protection system and devices in proper operating condition. Contact the installing contractor or product manufacturer with any questions.

Technical Data

Approvals
UL and C-UL Listed, see Table B
FM Approved, see Tables B and C
CSFM Listed

Applicable System Types:

- Single Interlock Wet Pilot Actuation
- Single Interlock Dry Pilot Actuation
- Single Interlock Electric Actuation
- Double Interlock Electric/Pneumatic Actuation
- Double Interlock Electric/Electric Actuation

System Types
The technical data sheets referenced in Table A provide complete details for each system type arrangement.

Working Pressure Range
DV-5A Valve: 20 to 300 psi (1,4 to 20,7 bar)

DV-5A Valve Trim: Refer to individual trim technical data sheets for rated trim pressures as shown in Table A.

DIM	Description	Nominal Riser Size Nominal Dimension in. (mm)[1]					
		1 1/2 (DN40)	**2 (DN50)**	**3 (DN80)**	**4 (DN100)**	**6 (DN150)**	**8 (DN200)**
A	System Discharge	1 1/2 (DN40)	2 (DN50)	3 (DN80)	4 (DN100)	6 (DN150)	8 (DN200)
B	Supply Header	4 (DN100)				8 (DN200)	
C	Drain Header	2 (DN50)					
D	Header Left	17.0 (431,8)				24.75 (628,7)	
E	Header Right	16 (406,4)				26.75 (679,5)	
F	Riser Height	68.26 (1733,8)	68.40 (1737,4)	68.44 (1738,4)	67.34 (1710,4)	67.9 (1724,7)	
G	Connection Offset	9.42 (239,3)				9.34 (237,2)	
H	Connection Offset	5.0 (127,0)				8.6 (218,4)	
J	Connection Offset	4.88 (124,0)				8.5 (215,9)	
K	Connection Offset	6.88 (174,8)				9.5 (241,3)	
L	Connection Offset	5.63 (143,0)				6.57 (166,9)	
M	Connection Offset	19.5 (495,3)				25.15 (638,8)	
N	Cabinet Height	73.25 (1860,6)				73.5 (1866,9)	
P	Cabinet Width	38.15 (969,0)				48.15 (1223,0)	
R	Cabinet Depth	23.73 (602,7)				29.64 (752,9)	

Notes
1. All pipe connections are grooved
2. Supply and drain header connections made internal to cabinet

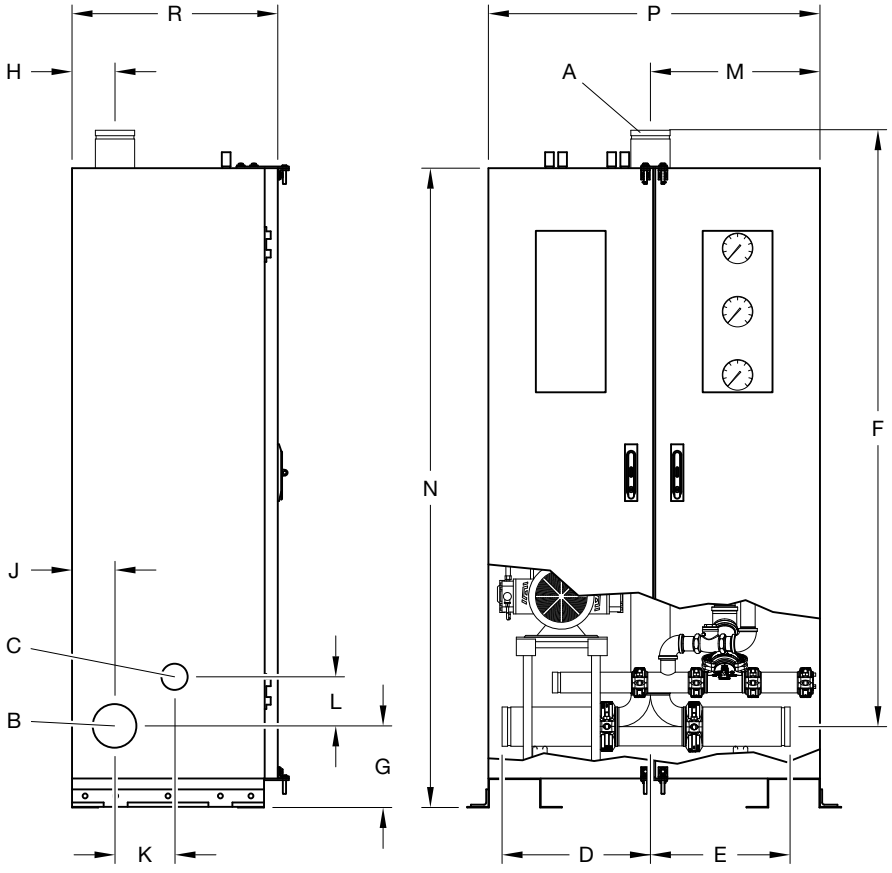

FIGURE 1
INSTALLATION DIMENSIONS AND REFERENCE POINTS

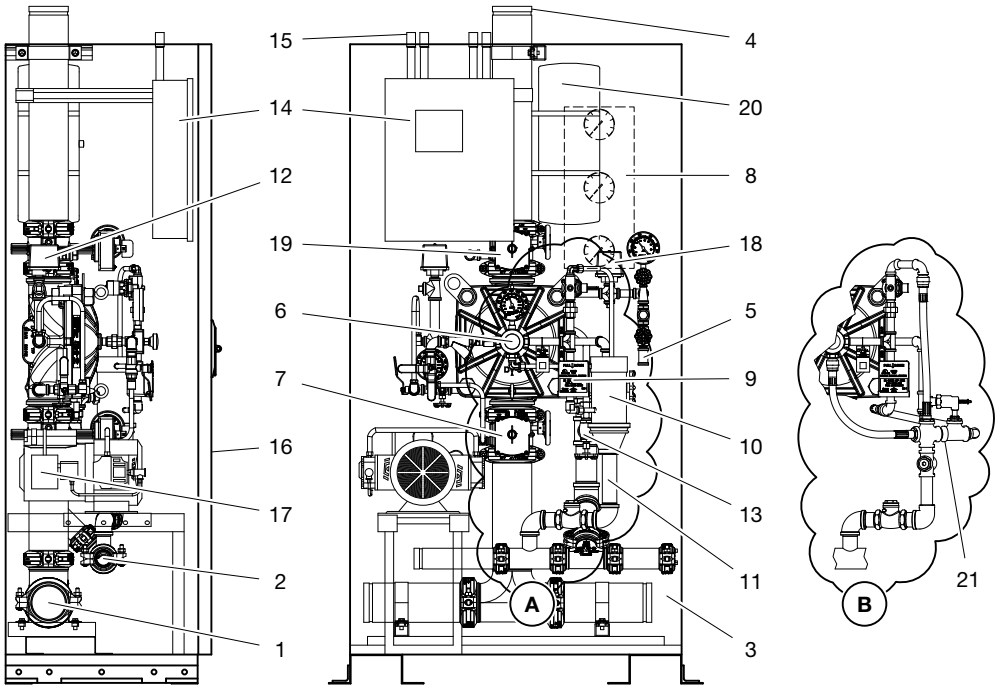

1 - Supply Header
2 - Drain Header
3 - Supply and Drain Header Connections on Left or Right Side
4 - System Discharge Connection
5 - System Air Supply Connection with Plug
6 - DV-5A Valve with Preaction Trim
7 - Manual System Shut-Off Valve
8 - System Pressure Gauges
9 - Manual Control Station
10 - Splash-Proof Drain Cup[A]
11 - Drain Header Integrated Trim Drain Connection
12 - Waterflow Pressure Alarm Switch
13 - Main Drain Valve
14 - Releasing Panel
15 - Electrical Conduit Connections
16 - Main Compartment Access Door with Optional Lock
17 - System Air Compressor
18 - Low Air Pressure Alarm Switch
19 - Manual System Shut-Off Valve
20 - Air Tank
21 - Fixed Drain with Sight Flow Glass[B]

Notes:
A. Drain cup Americas region only
B. Fixed drain APAC region only

FIGURE 2
TYPICAL ASSEMBLY ARRANGEMENT
(4 IN. DOUBLE INTERLOCK PREACTION SYSTEM WITH ELECTRIC/ELECTRIC ACTUATION SHOWN)

Construction
The Red-E Cabinet is constructed of a minimum thickness of 14 gauge steel and is free standing. The standard paint finish is bright red and black. The front doors of the enclosure are fully hinged (and removable) and open nearly to the cabinet floor level allowing easy access to the couplings when connecting the water supply and drain. Pre-drilled holes on tabs along the base of the cabinet provide an anchor point for the cabinet to be secured to the floor when required. Industrial grade rollers at the bottom of the cabinet are standard. Internal controls that provide functions to reset a system after operation - for example, the alarm test valve or main drain valve - are individually tagged for easy identification. All prefabricated piping is Schedule 40 steel.

Red-E Cabinets available in the Americas region feature a splash-proof drain cup, see arrangement A in Figure 2. Red-E Cabinets available in the APAC region feature a fixed drain piping assembly, see arrangement B in Figure 2. Both allow observation of drain discharge during flow testing while preventing water from splashing into the cabinet.

The splash-proof drain cup assembly combines a standard drip funnel and clear observation tube featuring a fail-safe overflow which allows water to be diverted in the event the drain is blocked. The drain cup assembly is penetrated by tubing from various trim drain points such as actuation devices as applicable.

The fixed drain arrangement connects trim drain points such as actuation devices by pipe, tubing and fittings through a sight flow glass.

Each drain arrangement is hard piped through a swing check valve to the main drain header, eliminating the need to run a separate drain line. The cabinet floor features a plugged drain opening to allow accumulated water to be removed if necessary.

The air supply connection for cabinets without compressors (using AMD-1) are terminated at a common height across all model sizes allowing the connection of groups of cabinets easier. This allows a single tank mounted compressor sized to meet the requirements of the largest system in the group to supply all the cabinets in the group, or alternatively, connect to the factory air supply. The air supply line contains a tee and plug which is used to connect a hydraulic test pump that pressurizes the sprinkler system above the butterfly valve for hydraulic testing of the system in accordance with NFPA 13.

Table A provides list of riser components and a cross reference to individual technical data sheets, as well as individual component laboratory approval information.

Figure 1 shows dimensional information for Red-E Cabinets, and Figure 2 illustrates the typical assembly arrangement.

Description		Model	TDS*	UL	C-UL/ULC	FM Global	CSA
Automatic Water Control Valve and Preaction Trim		DV-5A					
Single Interlock Wet Pilot Actuation			TFP1411	X	X	X	
Single Interlock Dry Pilot Actuation			TFP1416	X	X	X	
Single Interlock Electric Actuation			TFP1421	X	X	X	
Double Interlock Electric/Pneumatic Actuation			TFP1461	X	X	X	
Double Interlock Electric/Electric Actuation			TFP1466	X	X	X	
Preaction Type A			TFP1485				
System Shut-off Valve, 1 1/2 to 2 in. (DN40 to DN50)		POWERBALL	N/A	X[5]	X[5]	X[5]	
System Shut-off Valve, 3 to 8 in. (DN80 to DN200)		BFV-300	TFP1511	X	X	X	
Pressure Alarm Switch	Tyco, APAC/EMEA	TPS10X2	TFP2110	X[6]	X[6]	X[6]	
	POTTER, Americas	PS10-2A	N/A				
Low Pressure Alarm Switch	Tyco, APAC/EMEA	TPS40X2	TFP2110	X[6]	X[6]	X[6]	
	POTTER, Americas	PS40-2A	N/A				
Control Panel[1], POTTER		PFC-4410G3	N/A	X[6]	X[6]	X[6]	
Automatic Supervisory Air Supply[2]		G16AC812	TFP1620	X[7]			X[7]
Air Maintenance Device[3], Regulator Type		AMD-1	TFP1221	X	X	X	
Air Maintenance Device[4], Switch Type		AMD-2	TFP1231	X	X	X	
Nitrogen Maintenance Device[4]		AMD-3	TFP1241	X	X	X	
Model QRS-2 Electronic Accelerator		QRS-2	TFP1120	X		X	

Notes
1. The Model PFC-4410G3 is standard. The Red-E Cabinet may be ordered without an integral control panel. Preaction Type A systems are not approved for use with PFC-4410G3 Control Panel, utilizing model Fast 2000 instead.
2. The Model G16AC812 is utilized to maintain supervisory air pressure in all sizes of single interlock preaction systems with either electric actuation or wet pilot actuation.
3. The Model AMD-1 Air Maintenance Device, in addition to an auxiliary air tank, is utilized as standard equipment in single interlock preaction systems with dry pilot actuation, as well as double interlock preaction systems with electric/electric actuation and double interlock systems with electric/pneumatic actuation having a compressor that delivers air at 5.5 ft^3/min (0.16 m^3/min) or higher. In the case of single interlock preaction systems with dry pilot actuation, two AMD-1's are utilized to accomplish the two different pressure settings that are necessary for the system piping and the dry pilot line. In the case of double interlock preaction systems with electric/electric actuation, one AMD-1 is utilized to maintain the system pressure.
4. The Model AMD-2 Air Maintenance Device and Model AMD-3 Nitrogen Maintenance Device, as well as the Model AMD-1 Air Maintenance Device, are offered as options when the Red-E Cabinet is ordered without a built-in (for example, air compressor) automatic air supply.
5. Approvals under the name of LANSDALE VALVE & MANUFACTURING.
6. Approvals under the name of POTTER.
7. Approvals for the compressor and motor are under the name of GENERAL AIR PRODUCTS, and the approvals for the pressure operated switch are under the name of HUBBELL or CONDOR.

* TDS – Technical Data Sheet

TABLE A
PRINCIPAL COMPONENTS
TECHNICAL DATA SHEETS AND LABORATORY APPROVALS

Model Number	Horsepower	Voltage[1]	Theoretical fill times based on system size and target pressure	
			System Volume @20 psi in 30 min. gal (L)	System Volume @40 psi in 30 min. gal (L)
OLR12016AC	1/6	115/208-230 VAC 60 Hz	240 (909)	120 (454)
OLR25033AC	1/3	115/208-230 VAC 60 Hz	475 (1795)	250 (945)
OLR40050AC	1/2	115/208-230 VAC 60 Hz	800 (3028)	400 (1514)
OLR43075AC	3/4	115/208-230 VAC 60 Hz	930 (3520)	430 (1625)
OLR615100AC[2]	1	115/208-230 VAC 60 Hz	1430 (5410)	615 (2325)
OLR915150AC[2]	1 1/2	115/208-230 VAC 60 Hz	2320 (8780)	915 (3460)
OLR1225200AC[2]	2	208-230 VAC 60 Hz	3040 (11500)	1225 (4635)

Notes
1. Unless otherwise specified, 115 VAC, 60 Hz is provided.
2. For 6 in. (DN150) and 8 in. (DN200) cabinets only.

TABLE B
UL AND C-UL LISTED AND FM APPROVED
60 HZ AIR COMPRESSOR SELECTION CRITERIA
FOR DOUBLE INTERLOCK PREACTION SYSTEM ARRANGEMENTS
BASED ON SYSTEM TYPE AND VOLUME

Model Number	Power Rating (kW)	60 Hz Model Equivalent Horsepower Rating[1] (hp)	Voltage	Theoretical fill times based on system size and target pressure	
				System Volume @20 psi (1.36 bar) in 30 mins gal (L)	System Volume @40 psi (2.76 bar) in 30 mins gal (L)
OLR12016AC-50	0.12	1/6	220-240 VAC 50 Hz	192 (727)	96 (362)
OLR25033AC-50	0.25	1/3	220-240 VAC 50 Hz	414 (1567)	207 (785)
OLR40050AC-50	0.56	1/2	220-240 VAC 50 Hz	664 (2514)	332 (1257)
OLR50075AC-50	0.75	3/4	220-240 VAC 50 Hz	989 (3743)	415 (1571)
OLR600100AC-50	1.2	1	220-240 VAC 50 Hz	—	497 (1885)
OLR915150AC-50[2]	1.5	1 1/2	220-240 VAC 50 Hz	—	758 (2870)
OLR1225200AC-50[2]	2	2	220-240 VAC 50 Hz	—	1014 (3840)

Notes
1. Denotes the equivalent model of 60 Hz compressor for part number use. 50 Hz must specifically be request in ordering process. The horsepower model equivalent is not a direct conversion to kW. Actual conversion from kilowatts (kW) to horsepower units (hp) is based on 1 kW = 1.34102 hp.
2. For 6 in. (DN150) and 8 in. (DN200) cabinets onlv.

TABLE C
FM APPROVED
50 HZ AIR COMPRESSOR SELECTION CRITERIA
FOR DOUBLE INTERLOCK PREACTION SYSTEM ARRANGEMENTS
BASED ON SYSTEM TYPE AND VOLUME

Design Considerations

The automatic sprinklers and/or nozzles, fire detection devices, manual pull stations, and signaling devices that are to be utilized with the Red-E Cabinet must be UL Listed, ULC Listed, C-UL Listed, or FM Approved, as applicable. With reference to Figure 3, the system designer must consider and make preparations for use of a Red-E Cabinet as follows:

- Adequate floor space to facilitate opening of the cabinet doors
- Minimum ambient temperature of 40°F (4°C)
- Installation of a suitably sized water supply to the water supply header (Port B, Figure 1)
- Installation of system piping (Port A, Figure 1) including automatic sprinklers and/or nozzles from the Red-E cabinet outlet
- Installation of drains from main drain header (Port C, Figure 1)
- Installation of the detection system components and alarms
- Determination of air compressor size for double interlock preaction systems as a function of system type and volume as shown in Table B
- Power supply to Red-E Cabinet
- Separate power supply to the air compressor

Installation

The TYCO Red-E Cabinet is to be installed following the directions given in the “Red-E Cabinet Installer’s Manual” provided with the Red-E Cabinet. Instructions pertain to the following items:

- Placing the cabinet
- Connecting the system piping
- Electrical connections
- System start-up

Care and Maintenance

The TYCO DV-5A Red E-Cabinet must be maintained and serviced in accordance with this section.

Before closing a fire protection system main control valve for maintenance work on the fire protection system that it controls, permission to shut down the affected fire protection systems must first be obtained from the proper authorities. All personnel who may be affected by this decision must be notified.

Inspection, testing, and maintenance must be performed in accordance with the requirements of the NFPA, and any impairment must be immediately corrected.

The TYCO Red-E Cabinet does not require any regularly scheduled inspection or maintenance. The riser components enclosed within the Red-E Cabinet, however, must be maintained in accordance with their applicable technical data sheet as shown in Table A. In addition, the control panel and automatic air supply components must be maintained in accordance with their applicable instructions provided with the Red-E Cabinet.

The owner is responsible for the inspection, testing, and maintenance of their fire protection system and devices in compliance with this document, as well as with the applicable standards of any authorities having jurisdiction. Contact the installing contractor or product manufacturer with any questions.

Automatic sprinkler systems are recommended to be inspected, tested, and maintained by a qualified Inspection Service in accordance with local requirements and/or national codes.

Red-E Cabinet Technical Support

Technical support for the Red-E Cabinet is available by calling 888-572-4638 during regular business hours of 8:30-12:00 and 1:00-5:00 Eastern Time Monday through Friday.

Contact Red-E Cabinet Technical Support for special request cabinet configuration or electrical connection/ control panel programming inquiries.

An answering service will take messages outside of the regular business hours.

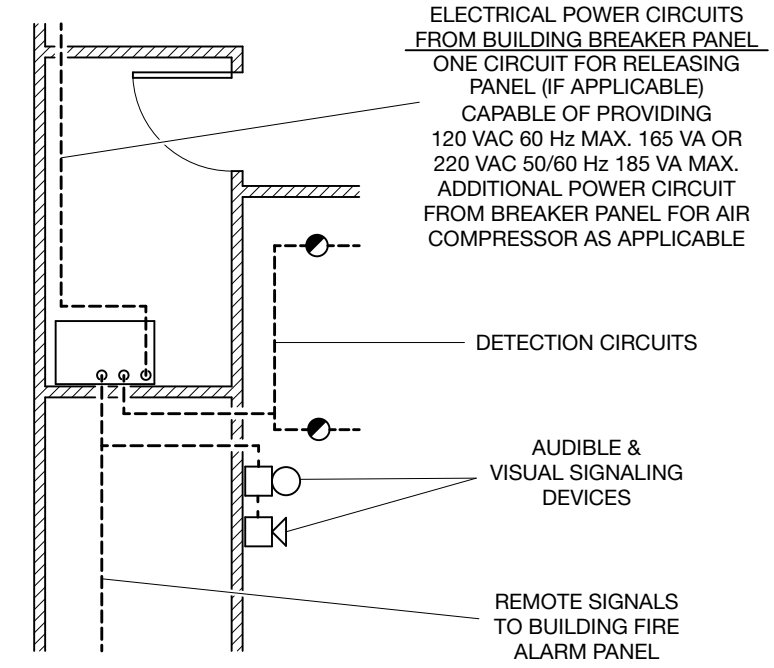

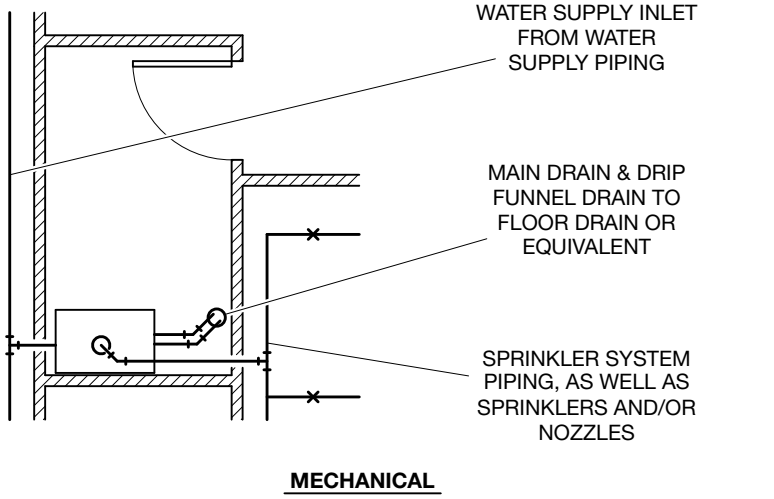

FIGURE 3
SYSTEM DESIGN CONSIDERATIONS

P/N 53XXXXXXXX

Solenoid Pressure Rating	
0	300 psi solenoid (standard)

Size in.	
1	1 1/2
2	2
3	3
4	4
6	6 (168,3 mm)
8	8

System Type[3]	
11	Single Interlock Wet Pilot Actuation
12	Single Interlock Dry Pilot Actuation
13	Single Interlock Electric Actuation
14	Double Interlock Electric/Pneumatic Actuation
15	Double Interlock Electric/Electric Actuation
16	Preaction Type A

Air Maintenance Device[1]	
0	None
1	AMD-1
2	AMD-2
3	AMD-3

Trim Type[2]	
1	NPT Galvanized

Control Panel	
0	None
A	Included

Compressor[1,4]	
0	None
1	1/6 hp 120 Gal
2	1/3 hp 250 Gal
3	1/2 hp 400 Gal
4	3/4 hp 430 Gal
5	1 hp 615 Gal
6	1 1/2 hp 915 Gal
7	2 hp 1225 Gal*
8	S/I Compressor

* Requires 230V/60Hz

Notes
1. Air Maintenance Device does not apply (select "0" - None) when a Compressor (1-8) is selected.
2. Black trim types are available only on request. Contact Red-E Cabinet Technical Support for information.
3. Special Order DV-5A Red-E Cabinet Integrated Preaction Fire Protection Package featuring Model QRS-2 Electronic Accelerator is available in configurations limited to 6 in. or 8 in. Size, Double Interlock Electric/Electric Actuation System Type, Model AMD-1 Air Maintenance Device, NPT Galvanized Trim Type, Control Panel Included and No Compressor. Part Numbers: 6 in. 53061511A0Q; 8 in. 53081511A0Q.
4. A 50 Hz compressor model is available on request, select the equivalent horsepower rating (1-8).

TABLE D
DV-5A RED-E CABINET PREACTION SYSTEMS
PART NUMBER SELECTION

Limited Warranty

For warranty terms and conditions, visit www.tyco-fire.com.

Ordering Procedure

The Part Numbers (P/Ns) in this section are provided for standard cabinets with integral control panel, built-in automatic air supply, for example, air compressor and controls, and galvanized pipe, nipples, and fittings.

DV-5A Red-E Cabinet with Single Interlock Preaction System

Specify: Size (specify) DV-5A Red-E Cabinet with (specify actuation) Single Interlock Preaction System Riser, P/N (specify per Table D)

NOTICE

Electric Actuation and Wet Pilot Actuation are provided standard with the Model G16AC812 Automatic Air Supply utilizing a 1/6 HP motor. Dry Pilot Actuation is provided standard with an OL12516AC (1/6 HP) Air Compressor and Auxiliary Air Tank complete with Model AMD-1 Air Maintenance Devices.

DV-5A Red-E Cabinet with Double Interlock Preaction System and Electric/Electric Actuation

Specify: Size (specify) DV-5A Red-E Cabinet with Electric/Electric-Actuated Double Interlock Preaction System Riser with (specify model from Table B or C) Air Compressor, P/N (specify from Table D)

DV-5A Red-E Cabinet with Double Interlock Preaction System and Electric/Pneumatic Actuation

Specify: Size (specify) DV-5A Red-E Cabinet with Electric/Pneumatic-Actuated Double Interlock Preaction System Riser with (specify model from Table B or C) Air Compressor, P/N (specify from Table D)

Special Orders

The DV-5A Red-E Cabinet can be provided as follows as part of a special request cabinet configuration:

- without the control panel
- without built-in automatic air supply, for example, air compressor and controls
- with an optional air/nitrogen maintenance device when ordered without built-in automatic air supply
- with trim black pipe, nipples, and fittings, as may be desired for foam systems
- with Model QRS-2 Electronic Accelerator, for the 6 in. and 8 in. Double Interlock Electric/Electric Actuation system types as shown in Table D, note 3; and refer to Technical Data Sheet TFP1120 for more information
- with special size air compressors for single interlock systems
- with 50 Hz air compressors
- with seismic kit. Kit must be ordered separately:

Valve Size	Part No.
1 1/2 to 4 in.	530400001
4 to 8 in.	530800001

Options

- with sight flow gage (provides a visual indication of flow through the main drain)
- with extra capacity batteries (12V up to 18Ah) for longer battery time and/or systems with heavy power requirements , for example, numerous audible signaling devices
- with Class "A" initiating appliance circuits (this option permits the connection of Class "A" style wiring to the initiating zones)
- with Class "A" indicating appliance circuits (this option permits the connection of Class "A" style wiring to the indicating zones)
- with auxiliary relay modules to provide extra-dry contacts when required; up to an 8 ARM-44 module per cabinet can be added
- with RA-4410 RC Remote Annunciator

Contact Red-E Cabinet Technical Support for information about special request cabinet configurations.

1467 Elmwood Avenue, Cranston, RI 02910 | Telephone +1-401-781-8220

© 2025 Johnson Controls. All rights reserved. All specifications and other information shown were current as of document revision date and are subject to change without notice.

NATIONAL FIRE PROTECTION ASSOCIATION and NFPA are registered trademarks of National Fire Protection Association;
LANSDALE VALVE & MANUFACTURING and POWERBALL are trademarks of Lansdale Valve & Manufacturing Corp.; POTTER is a trademark of Potter Electric Signal Company, LLC;
GENERAL AIR PRODUCTS is a trademark of General Air Products, Inc; HUBBELL is a trademark of Hubbell Inc; CONDOR is a trademark of Condor-Werke Gebr. Frede GmbH

Johnson Controls