Model FTR-1 Fixed Temperature Release For Deluge and Preaction Systems Wet or Dry Pilot Release Service

IMPORTANT

Refer to Technical Data Sheet TFP2300 for warnings pertaining to regulatory and health information.

Always refer to Technical Data Sheet TFP700 for the "INSTALLER WARNING" that provides cautions with respect to handling and installation of sprinkler systems and components. Improper handling and installation can permanently damage a sprinkler system or its components and cause the sprinkler to fail to operate in a fire situation or cause it to operate prematurely.

Scan the QR code or enter the URL in a web browser to access the most up-to-date electronic version of this document. Data rates may apply.

docs.jci.com/tycofire/tfp1388

General Description

The TYCO Model FTR-1 Fixed Temperature Release is a fixed temperature, heat detector intended for wet or dry pilot release service. It can be used for pilot-line service, instead of standard sprinklers, to activate deluge and preaction systems equipped with either wet or dry pilot-line detection.

The Model FTR-1, while resembling a standard sprinkler in construction, follows the installation rules for a listed fixed temperature heat detector as opposed to the standard rules for using standard sprinklers as pilot sprinklers. The Model FTR-1 features a fast response thermal element, extended spacings as compared to using standard sprinklers as pilot sprinklers, and a corrosion-resistant assembly option for outdoor applications, (TEFLON coated) not available with standard sprinklers offerings.

The white polyester and green TEFLON coatings can be used for decorative applications. Both finishes are UL Listed as corrosion-resistant. The TEFLON coated Model FTR-1 features a stainless steel button and compression screw, making it more desirable where maximum corrosion resistance is a consideration.

Corrosion-resistant coatings are utilized to extend the life of copper alloy construction beyond that which would otherwise be obtained during exposure to corrosive atmospheres. Although the corrosion-resistant coatings have passed the standard corrosion tests performed by UL, the testing is not representative of all possible corrosive atmospheres. Consequently, it is recommended that the end user be consulted with respect to the suitability of these coatings for any given corrosive environment. The effects of ambient temperature, concentration of chemicals, and gas/chemical velocity should be considered, as a minimum, along with the corrosive nature of the chemical to which the Model FTR-1 will be exposed.

As an option, the Model FTR-1 Fixed Temperature Release may be equipped the Model G1 Sprinkler Guard described in Technical Data Sheet TFP780.



NOTICE

The Model FTR-1 Fixed Temperature Release described herein must be installed and maintained in compliance with this document and with the applicable standards of the NATIONAL FIRE PROTECTION ASSOCIATION (NFPA), in addition to the standards of any authorities having jurisdiction. Failure to do so may impair the performance of these devices.

The owner is responsible for maintaining their fire protection system and devices in proper operating condition. Contact the installing contractor or product manufacturer with any questions.

Sprinkler Identification Number (SIN)

TY3030

Components:

1 - Frame
2 - Button
3 - Sealing Assembly
4 - Bulb
5 - Compression Screw
6 - Identification Plate*

* Temperature rating is indicated on Identification Plate.

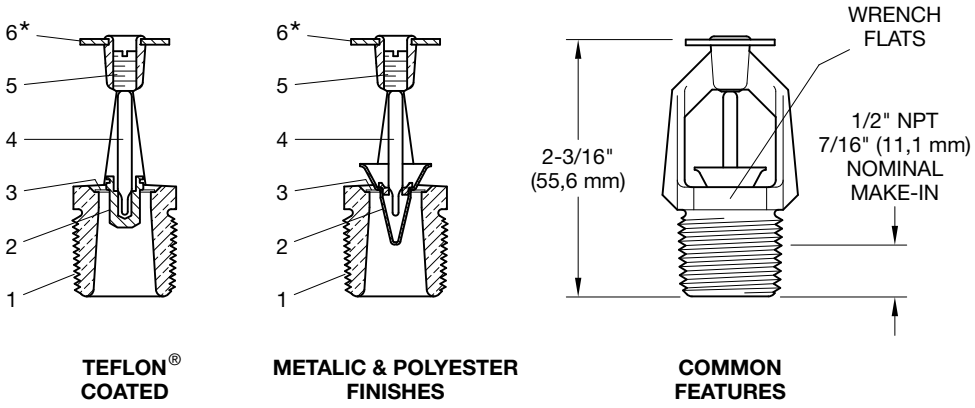

FIGURE 1
MODEL FTR-1 FIXED TEMPERATURE RELEASE

Release Temperature Classification	Nominal Release Temperature Rating	Maximum Ambient Ceiling Temperature(1)	Bulb Fluid Color	Listed Spacing(2), ft x ft (m x m)
Ordinary	135°F (57°C)	100°F (38°C)	Orange	40 x 40 (12,2 x 12,2)
Ordinary	155°F (68°C)	100°F (38°C)	Red	30 x 30 (9,1 x 9,1)
Intermediate	175°F (79°C)	150°F (65°C)	Yellow	40 x 40 (12,2 x 12,2)
Intermediate	200°F (93°C)	150°F (65°C)	Green	30 x 30 (9,1 x 9,1)

Notes:
1. Based on NFPA 13. Other limits may apply, depending on fire loading, release location, and other requirements of the authority having jurisdiction.
2. Listed spacings are for smooth, flat, and horizontal ceilings. Installation must comply with NFPA 15 or NFPA 72, as applicable.

TABLE A
UL AND C-UL LISTED SPACINGS FOR THE MODEL FTR-1 FIXED TEMPERATURE RELEASE FOR INSTALLATION BELOW SMOOTH, FLAT, HORIZONTAL CEILINGS

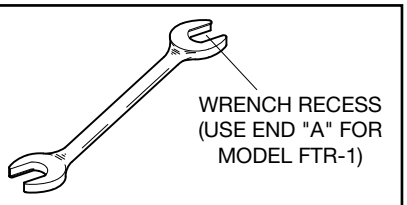

FIGURE 2
W-TYPE 6
SPRINKLER WRENCH

Technical Data

Approvals
UL and C-UL Listed
(Fixed Temperature Heat Detector)

White Polyester and Green TEFLON coatings are Listed as corrosion-resistant.

Maximum Working Pressure
250 psi (17,2 bar)

Pipe Thread Connection
1/2 NPT

Discharge Coefficient
K=5.6 gpm/psi$^{1/2}$ (80 lpm/bar$^{1/2}$)

Finish
(Frame and Identification Plate)
Natural Brass,
White Polyester Coated, or
Green TEFLON Coated

Temperature Ratings
135°F (57°C)
155°F (68°C)
175°F (79°C)
200°F (93°C)

Physical Characteristics

Frame	Bronze
Button*	Copper/Bronze
Bulb	Glass (3 mm)
Compression Screw*	Bronze
Identification Plate	Copper/Brass
Sealing Assembly	Beryllium Nickel w/TEFLON

* Button and Compression Screw are Stainless Steel for TEFLON coated assemblies.

Operation

The glass bulb contains a fluid that expands when exposed to heat. When the rated temperature is reached, the fluid expands sufficiently to shatter the glass bulb, allowing the pressure (water for wet pilot or air/nitrogen for dry pilot) to escape from the pilot line.

Design Criteria

Model FTR-1 Temperature Rating
Select the proper temperature rated Model FTR-1 for the hazard and ambient temperatures involved. (To permit early detection, it is advisable to use the lowest temperature combinations approved for the hazard and ambient temperature involved.)

For localized high ambient temperature such as those caused by unit heaters and skylights, substitute a higher temperature-rated Model FTR-1 per Table A.

Model FTR-1 Spacing Indoors
The distance between adjacent Model FTR-1s is not to exceed the listed spacing.

The distance between a Model FTR-1 device and any wall or partition that extends to within 18 inches (457 mm) of the ceiling is not to exceed 1/2 the listed spacing.

The distance from the Model FTR-1 to all points in the area of coverage (corners) is not to exceed 70% of the listed spacing.

- For smooth ceilings up to and including 10 ft (3,05 m), refer to Table A for listed spacing of the Model FTR-1 below smooth, flat, horizontal ceilings.
- For solid joist beam sloped ceilings greater than 10 ft (3,05 m) up to and including 30 ft (9,14 m), reduce to the smooth ceiling spacings per the requirements of the 2013 Edition of NFPA 72, Section 17.6.3.

Model FTR-1 Spacing Outdoors
Follow the applicable fixed temperature detector requirements of the 2012 Edition of NFPA 15, Section 6.5.2.3.

Model FTR-1 Location Indoors
The Model FTR-1 Fixed Temperature Releases are spot-type releases and the requirements of NFPA 72 with respect their location apply. In general, the requirements are as follows:

- For smooth ceilings, locate the FTR-1 with an Identification Plate to ceiling distance of 1 to 12 inches (25,4 to 305 mm), and no closer than 4 inches (100 mm) from any wall.
- For solid joist construction, locate the FTR-1 with the Identification Plate within a horizontal plane of 1 to 6 inches (25,4 to 152 mm) below the bottom of the joists and a maximum distance of 22 inches (559 mm) below the ceiling/roof deck, and no closer than 4 inches (100 mm) from any wall.
- For beam construction where the beams are less than 12 inches (300 mm) in depth and less than 8 feet (2,4 m) on center, locate the FTR-1 with the Identification Plate within a horizontal plane of 1 to 6 inches (25,4 to 152 mm) below the bottom of the beams and a maximum distance of 22 inches (559 mm)below the ceiling/roof deck, and no closer than 4 inches (100 mm) from any wall.

Model FTR-1 Location Outdoors
Follow the applicable requirements of the 2012 Edition of NFPA 15, Section 6.5.2.

Model FTR-1 Orientation
The Model FTR-1 may be installed in any orientation; however, in locations where the pilot line system is subject to freezing conditions they are to be installed in the upright position (for example, with the Identification Plate at the top as shown in Figure 1).

Installation

The TYCO Model FTR-1 Fixed Temperature Release must be installed in accordance with this section.

General Instructions
Refer to Technical Data Sheet TFP700 for the "INSTALLER WARNING." Due to the similarity of the Model FTR-1 Fixed Temperature Release to automatic sprinklers, all of the information pertaining to automatic sprinklers applies to the Model FTR-1.

Do not install a Model FTR-1 if the bulb is cracked or there is a loss of liquid from the bulb. With the Model FTR-1 is held horizontally, a small air bubble should be present. The diameter of the air bubble is approximately 1,6 mm.

A leak tight 1/2 inch NPT nozzle joint should be obtained by applying a minimum to maximum torque of 7 ft/lbs to 14 ft/lbs (9,5 N·m to 19,0 N·m). Higher levels of torque may distort the FTR-1 inlet with consequent leakage or impairment to the FTR-1.

Note: *The FTR-1 may be installed in any orientation; however, in locations where the pilot line system is subject to freezing conditions they are to be installed in the upright position (i.e., with the Identification Plate at the top as shown in Figure 1).*

Step 1. With pipe thread sealant applied to the pipe threads, hand tighten the FTR-1 into the sprinkler fitting.

Step 2. Wrench tighten the FTR-1 using only the W-Type 6 (End A) Sprinkler Wrench. The Wrench Recess of the Sprinkler Wrench (see Figure 2) is to be applied to the FTR-1 Wrench Flats (see Figure 1).

Care and Maintenance

The TYCO Model FTR-1 Fixed Temperature Release must be maintained and serviced in accordance with this section.

Before closing a fire protection system main control valve for maintenance work on the fire protection system that it controls, obtain permission to shut down the affected fire protection system from the proper authorities and notify all personnel who may be affected by this action.

The owner is responsible for the inspection, testing, and maintenance of their fire protection system and devices in compliance with this document, as well as with the applicable standards of the NATIONAL FIRE PROTECTION ASSOCIATION (for example, NFPA 25), in addition to the standards of any other authorities having jurisdiction. Contact the installing contractor or product manufacturer with any questions.

Automatic sprinkler systems should be inspected, tested, and maintained by a qualified Inspection Service in accordance with local requirements and/or national code.

Model FTR-1 Fixed Temperature Releases that are found to be leaking or exhibiting visible signs of corrosion must be replaced.

Model FTR-1 Fixed Temperature Releases must never be painted, plated, coated, or otherwise altered after leaving the factory. Modified Model FTR-1s must be replaced. Model FTR-1s that have been exposed to corrosive products of combustion, but have not operated, should be replaced if they cannot be completely cleaned by wiping the Model FTR-1 with a cloth or by brushing it with a soft bristle brush.

Care must be exercised to avoid damage to the Model FTR-1s before, during, and after installation. Model FTR-1s damaged by dropping, striking, wrench twist/slippage, or the like, must be replaced. Also, replace any Model FTR-1 that has a cracked bulb or that has lost liquid from its bulb. (see Installation section.)

Frequent visual inspections are recommended to be initially performed for corrosion resistant coated Model FTR-1s, after the installation has been completed, to verify the integrity of the corrosion resistant coating. Thereafter, annual inspections per NFPA 25 (as required for automatic sprinklers) should suffice; however, instead of inspecting from the ground level, a random sampling of close-up visual inspections should be made, so as to better determine the exact condition of the Model FTR-1 and the long term integrity of the corrosion resistant coating, as it may be affected by the corrosive conditions present.

Limited Warranty

For warranty terms and conditions, visit www.tyco-fire.com.

Ordering Procedure

Contact your local distributor for availability. When placing an order, indicate the full product name and part number (P/N).

Sprinkler Assemblies
Specify: Model FTR-1 (TY3030), Fixed Temperature Release with (specify) temperature rating, (specify) finish, and P/N (specify):

135°F (57°C)
Natural Brass 510411135
Green TEFLON Coated 510413135
White Polyester Coated 510414135

155°F (68°C)
Natural Brass 510411155

175°F (79°C)
Natural Brass 510411175
Green TEFLON Coated 510413175

200°F (93°C)
Natural Brass 510411200
Green TEFLON Coated 510413200

Sprinkler Wrench
Specify: W-Type 6 Sprinkler Wrench, P/N 560006387

1467 Elmwood Avenue, Cranston, RI 02910 | Telephone +1-401-781-8220

© 2025 Johnson Controls. All rights reserved. All specifications and other information shown were current as of document revision date and are subject to change without notice.

NATIONAL FIRE PROTECTION ASSOCIATION and NFPA are registered trademarks of National Fire Protection Association;
TEFLON is a trademark of The Chemours Company FC, LLC

Johnson Controls