DV-5A Wet Pilot Actuated Deluge Valve

IMPORTANT
Refer to Technical Data Sheet TFP2300 for warnings pertaining to regulatory and health information.

Scan the QR code or enter the URL in a web browser to access the most up-to-date electronic version of this document. Data rates may apply.

docs.jci.com/tycofire/tfp1311

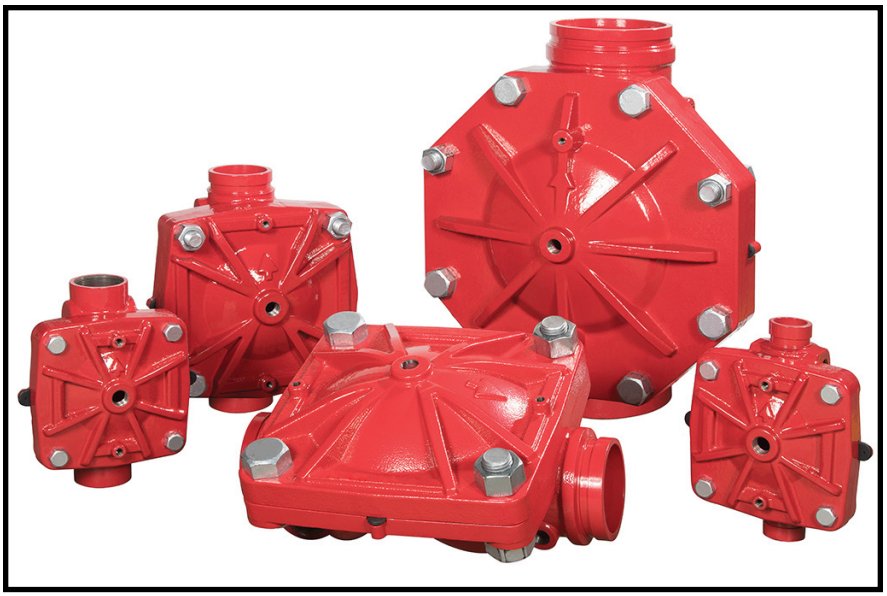

Available End Connections and Weights

End Connection		Nominal Valve Size, ANSI Inches (DN)						
Inlet	Outlet	1 1/2 (40)	2 (50)	3 (80)	4 (100)	6 (150)	165,1 mm	8 (200)
		Weight, lb (kg)						
Groove	Groove	25 (11,3)	25 (11,3)	60 (27,2)	95 (43,1)	177 (80,3)	177 (80,3)	327 (148,3)
Flange	Flange	N/A	N/A	72 (32,7)	116 (52,6)	204 (92,5)	N/A	365 (165,6)

General Description

The TYCO DV-5A Automatic Water Control Valve Deluge Wet Pilot Actuation is a diaphragm type valve that can be used in deluge fire protection systems. When properly trimmed, the double seat design of the DV-5A Valve also provides actuation of fire alarms upon system operation.

The diaphragm style design of the DV-5A Valve allows external resetting, providing for easy resetting of a deluge system without having to open a valve handhole cover to manually reposition a clapper and/or latch mechanism. Simply re-pressurizing the diaphragm chamber resets the valve.

The DV-5A features internal and external coating of the valve to provide corrosion resistance. The external corrosion resistance of the epoxy coating permits the use of the DV-5A in corrosive atmospheres associated with many types of industrial processing plants and outdoor installations.

The DV-5A Deluge Wet Pilot Actuation Valve is offered with the DV-5A Valve and separately ordered semi-assembled trim as shown in Figure 5 for ease of installation.

The DV-5A Deluge Wet Pilot Actuation Valve is offered with or without a System Main Control Valve.

NOTICE

The DV-5A Deluge Wet Pilot Actuation Valve described herein must be installed and maintained in compliance with this document, as well as with the applicable standards of the NATIONAL FIRE PROTECTION ASSOCIATION (NFPA), in addition to the standards of any other authorities having jurisdiction. Failure to do so may impair the performance of these devices.

The owner is responsible for maintaining their fire protection system and devices in proper operating condition. Contact the installing contractor or product manufacturer with any questions.

Item	Description	Qty.	Nominal Valve Size ANSI Inch (DN)					
			1 1/2 (DN40)	2 (DN50)	3 (DN80)	4 (DN100)	6 (DN150)[e]	8 (DN200)
			P/N	P/N	P/N	P/N	P/N	P/N
1	Valve Body	1	N/R	N/R	N/R	N/R	N/R	N/R
2	Diaphragm	1	545000020	545000020	545000030	545000040	545000060	545000080
3	Diaphragm Cover	1	N/R	N/R	N/R	N/R	N/R	N/R
4	Hex Bolt, Short	2[a]	545100001	545100001	545100002	545100003	545100004	545100003
5	Hex Bolt, Long	2	545100011	545100011	545100012	545100013	545100014	545100015
6	Lift Washer	2[b]	N/A	N/A	545100021	545100022	545100023	545100022
7	Hex Nut	2	545100031	545100031	545100032	545100033	545100034	545100033
8	Hoist Ring	2	545100041	545100041	545100041	545100041	545100041	545100041
9	Flat Washer	2	N/A	N/A	545100024	545100025	545100026	545100025

NOTES
a. Hex Bolt, Short, Qty. 6 in 6 and 8 inch (DN150 and DN200) assemblies.
b. Lift Washer not used in 1-1/2 and 2 inch (DN40 and DN50) assemblies.
c. N/R = Not Replaceable
d. Order replacements parts only via Part Numbers given, do not replace Hex Bolt, Hex Nut, Lift Washer or Hoist Ring with common hardware parts. For wrench and socket sizes, see Table C.
e. Also applicable to metric 165,1 mm size.

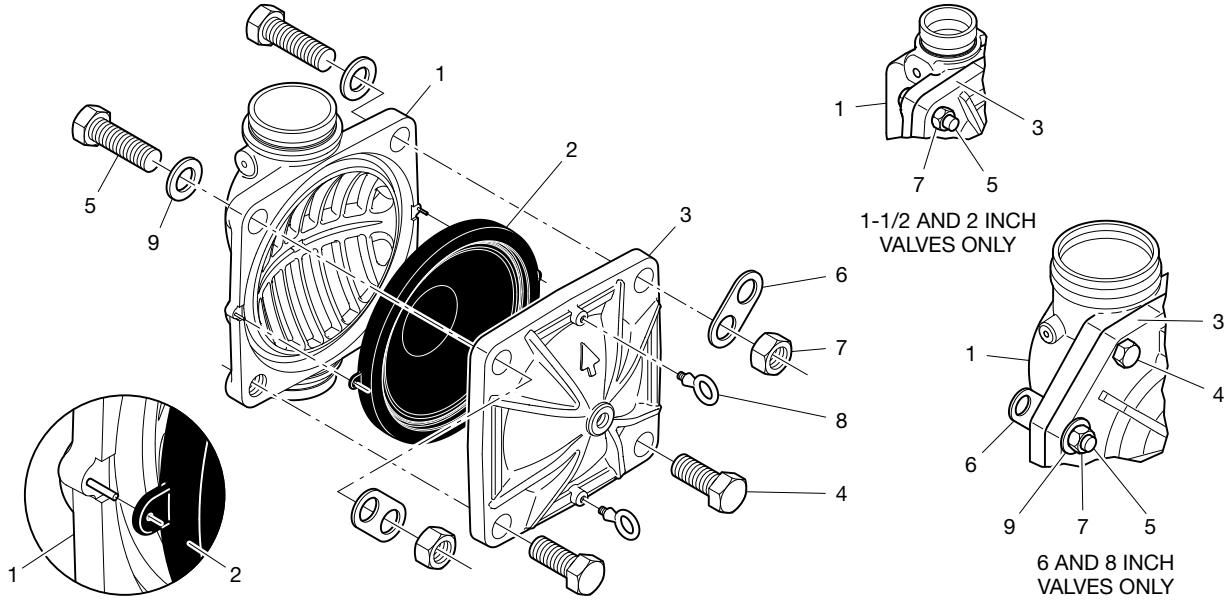

FIGURE 1
DV-5A VALVE ASSEMBLY AND REPLACEMENT PARTS

Nominal Valve Size ANSI Inches (DN)	Flange Drilling Specification											
	Nominal Dimensions in Inches and (mm)											
	ANSI B16.42[a] (Class 150)			ISO 7005-2 (PN16)[b]			JIS B 2210 (10K)			AS 2129 (Table E)		
	A	B	N	A	B	N	A	B	N	A	B	N
3 (80)	6.00 (152,4)	0.75 (19,0)	4	6.30 (160,0)	0.75 (19,0)	8	5.90 (150,0)	0.59 (15,0)	8	5.75 (146,0)	0.71 (18,0)	4
4 (100)	7.50 (190,5)	0.75 (19,0)	8	7.09 (180,0)	0.75 (19,0)	8	6.89 (175,0)	0.60 (15,0)	8	7.00 178,0)	0.71 (18,0)	8
6 (150)	9.50 (241,3)	0.88 (22,2)	8	9.45 (240,0)	0.91 (23,0)	8	9.45 (240,0)	0.75 (19,0)	8	9.25 (235,0)	0.87 (22,0)	8
8 (200)	11.75 (298,5)	0.88 (22,2)	8	11.61 (295,0)	0.91 (23,0)	12	11.42 (290,0)	0.75 (19,0)	12	11.50 (292,0)	0.87 (22,0)	8

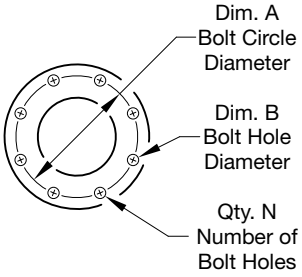

NOTES:
a. Flat face flange; Same drilling as for ANSI B16.1 (Class 125)
b. Same drilling as for BS 4504 Section 3.2 (PN16) and DIN 2532 (PN16)

TABLE A
FLANGE DRILLING SPECIFICATIONS

Port	Port Description	Port Sizes, NPT Inch per ANSI B1.20.1					
		1 1/2 (DN40)	2 (DN50)	3 (DN80)	4 (DN100)	6 (DN150)[a]	8 (DN200)
P1	Diaphragm Chamber Supply	1/2	1/2	1/2	1/2	1/2	1/2
P2	Water Supply Pressure & Alarm Test	1/2	1/2	1/2	1/2	1/2	1/2
P3	Alarm Actuation	3/4	3/4	3/4	3/4	3/4	3/4
P4	Automatic Drain Valve	1/2	1/2	1/2	1/2	1/2	1/2
P5	System Drain	3/4	3/4	3/4	3/4	3/4	3/4
P6	Main Drain	3/4	3/4	1-1/4	2	2	2
P7	System Air Supply Not Used for Deluge	1/2	1/2	1/2	1/2	1/2	1/2

NOTES
a. Also applicable to metric 165,1 mm size.

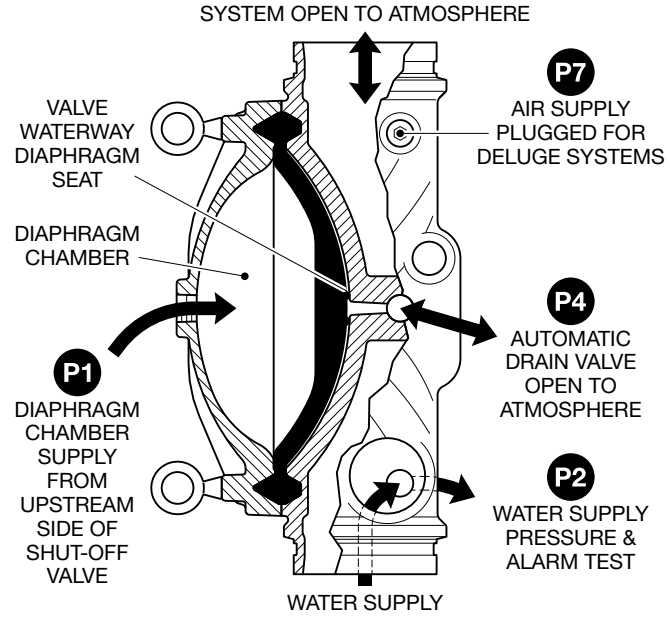

FIGURE 2A
SET CONDITION

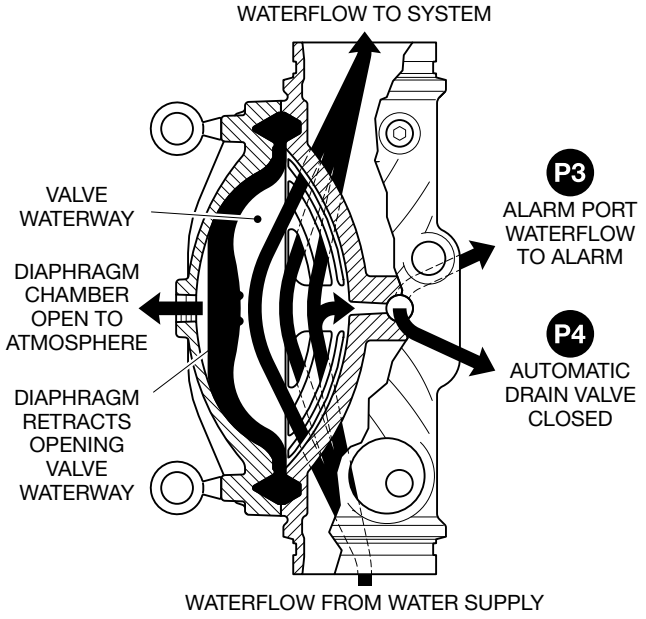

FIGURE 2B
OPERATED CONDITION

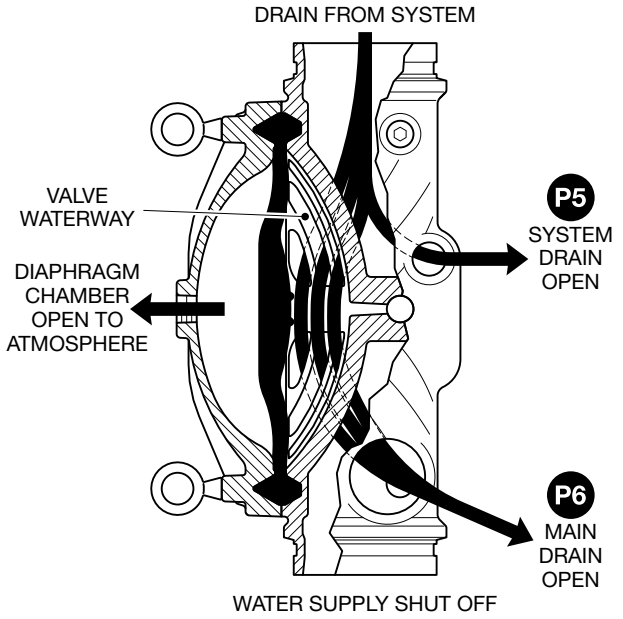

FIGURE 2C
SYSTEM DRAIN CONDITION

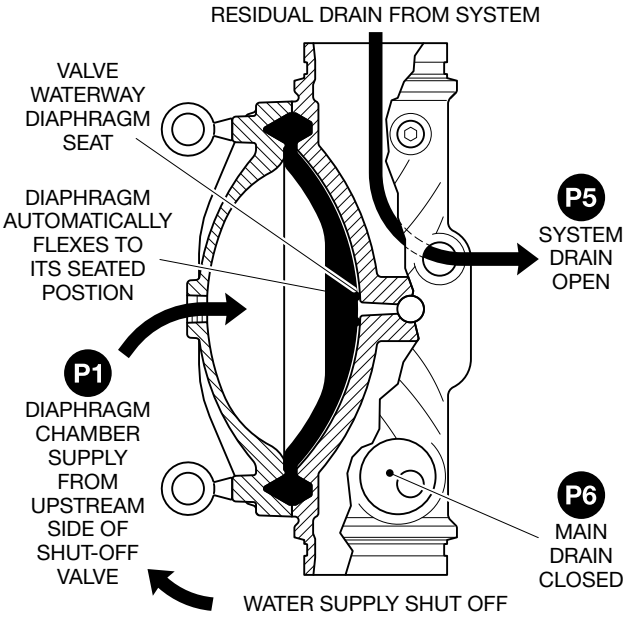

FIGURE 2D
RESIDUAL DRAIN CONDITION

FIGURE 2
DV-5A VALVE OPERATION, DELUGE SYSTEMS

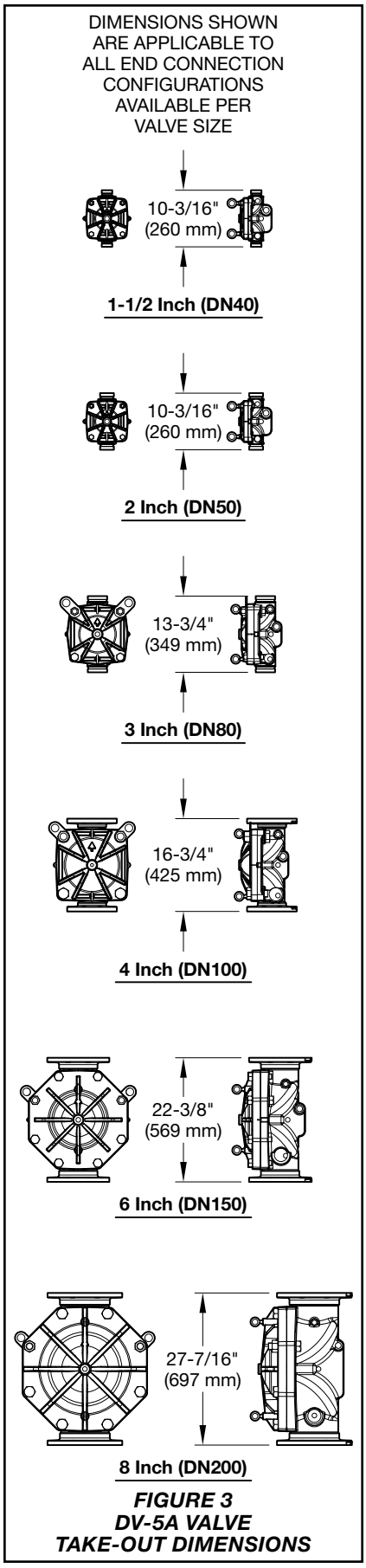

FIGURE 3
DV-5A VALVE
TAKE-OUT DIMENSIONS

Technical Data

Approvals
UL and C-UL Listed
FM Approved
VdS Approved*
LPCB Approved*

Listings and Approvals are based on DV-5A Deluge Wet Pilot Actuation Valve being trimmed as described in Figure 5.

For local EMEA regional approvals, consult with your local distributor.

*VdS and LPCB approval is additionally based on installing the VdS and LPCB required water column prevention drain components provided with assemblies in the Ordering Procedure section.

DV-5A Valve
Components for the 1 1/2 in. to 8 in. (DN40 to DN200) DV-5A Valves are shown in Figure 1. The DV-5A Valves are for vertical installations. They are rated for use at a service pressures of 20 psi to 300 psi (1,4 bar to 20,7 bar).

The take-out dimensions are shown in Figure 3, and the flanged connections are available drilled per ANSI, ISO, AS, and JIS specifications (See Table A). Threaded port connections are NPT threaded.

Note: *PN16 flanges are pressure rated to 16 bar.*

Valve Trim
The maximum pressure rating for the DV-5A Deluge Wet Pilot Actuation Valve is 300 psi (20,7 bar)

When the system pressure is greater than 175 psi (12,1 bar), provision is to be made to replace the standard order 300 psi (20,7 bar) water pressure gauges with separately ordered 600 psi (41,4 bar) water pressure gauges.

If the addition of an alarm control valve is desired or required by the local AHJ, the alarm control valve noted as Item H in Figure 8 is to be a separately ordered electronically supervised normally open valve.

External trim connections are NPT threaded. EMEA trim is provided with NPT x ISO 7-1 thread adapters.

Pressure Loss
See Graph A

Detection System
See subsection Wet Pilot Actuation

Materials of Construction

Valve Body
Epoxy coated ductile iron per ASTM A536-77, Grade 65-45-12

Diaphragm Cover
Epoxy coated ductile iron per ASTM A536-77, Grade 65-45-12

Diaphragm
Polyester fabric reinforced, TEFLON coated, EPDM rubber per ASTM D2000

Diaphragm Cover Fasteners
Aluminum zinc coated steel

Note: *For wrench and socket sizes, see Table C.*

Common Hardware Trim
- Common hardware pipe fittings are galvanized or black as required and are malleable per ASME B16.3.
- Common hardware pipe nipples are galvanized or black as required and are Schedule 40 per ASTM A53 or A135.
- Common hardware compression fittings are brass per ASTM B16.
- Common hardware tubing is Type L copper per ASTM B88.

Operation

The TYCO DV-5A Valve is a diaphragm style valve that depends upon water pressure in the diaphragm chamber (See Figure 2A) to hold the diaphragm closed against the water supply pressure.

When the DV-5A valve is set for service, the diaphragm chamber is pressurized through the trim connections from the inlet side of the system's main control valve.

Opening the wet pilot actuation trips the Model MRA-1 Manual Reset Actuator. Tripping the MRA-1 releases water from the DV-5A diaphragm chamber faster than it can be replenished through a 1/8 in. (3,2 mm) restriction located in the diaphragm chamber supply connection. Release of water through the MRA-1 results in a rapid pressure loss in the DV-5A diaphragm chamber. The force differential applied through the diaphragm to hold the diaphragm in the set position is then reduced below the valve trip point. The water supply pressure then forces the diaphragm open permitting water to flow into the system piping, as well as through the alarm port to actuate the system alarms (See Figure 2B).

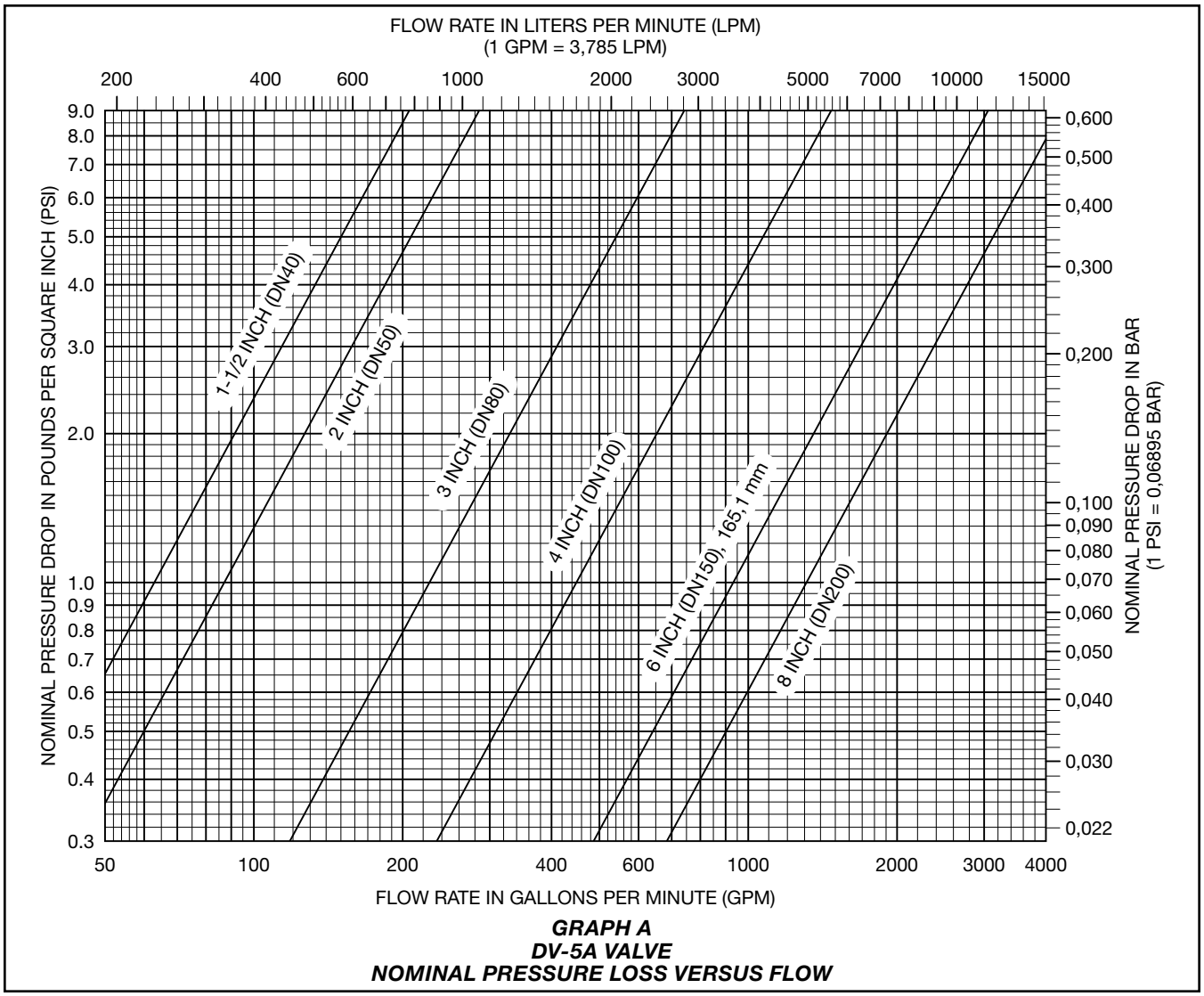

GRAPH A
DV-5A VALVE
NOMINAL PRESSURE LOSS VERSUS FLOW

Upon opening of the DV-5A valve, the Model MRA-1 Manual Reset Actuator, which is described in Technical Data Sheet TFP1387, opens to constantly vent the DV-5A diaphragm chamber to hydraulically latch the DV-5A in the tripped position until manually reset.

See the Wet Pilot Actuation section for additional information.

Wet Pilot Actuation

The wet pilot actuation trim forms a part of the laboratory approval of the DV-5A Valves and is necessary for their proper operation.

With reference to Figure 4, the wet pilot actuation trim provides for connection of a detection system consisting of wet pilot line sprinklers (heat detectors) and manual control stations interconnected with minimum 1/2 in. (DN15) steel pipe. The pilot line is connected to the wet pilot line connection.

Dimensions are provided in Figure 7.

Pilot sprinklers are to be minimum 5.6 K-factor (80 K-factor) orifice approved automatic sprinklers. Manual control stations are to be the Model MC-1 described in Technical Data Sheet TFP1382.

The maximum height of a wet pilot line above the DV-5A Valve must not exceed the limitations shown in Table B as a function of the minimum water supply pressure to the DV-5A Valve for an equivalent length (pipe plus fittings) of the pilot line up to 500 ft (150 meters) to the most remote pilot sprinkler.

Provision must be made for installing a 5.6 K-factor (80 K-factor) orifice, inspector's test connection at the most hydraulically demanding location of a wet pilot line (usually adjacent to the highest and most remote wet pilot sprinkler or manual control station).

Notes: *Wet pilot lines must be maintained at a minimum temperature of 40°F (4°C).*

At a minimum, it is recommended that internally galvanized pipe and fittings be used for wet pilot lines.

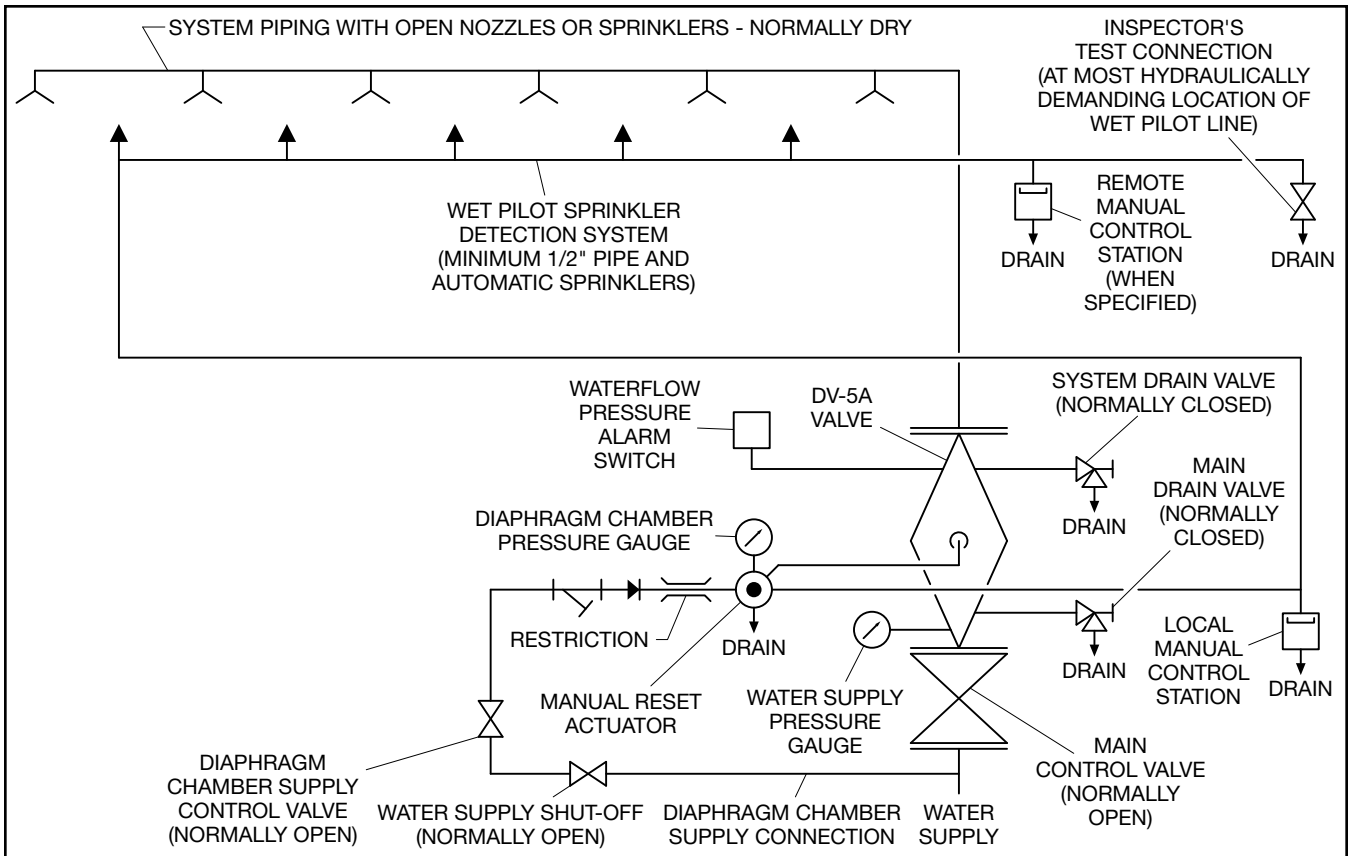

FIGURE 4
DV-5A VALVE
DELUGE WET PILOT ACTUATION SCHEMATIC DIAGRAM

Installation

The TYCO DV-5A Automatic Water Control Valve Deluge Wet Pilot Actuation is to be installed in accordance with this section.

NOTICE

DV-5A Automatic Water Control Valves are designed to be used in freshwater systems. When the supply is from an alternative source such as brackish water, saltwater, or contains additives such as foam, the limited warranty is reduced to one year from the time of installation. An increase in frequency of inspections is required when the valve is exposed to such supplies and other corrosive conditions or chemicals that could impact valve materials or the operation of the assembly. The system and all components must be designed accordingly for the increased demand. It is required to thoroughly flush the valve and trim assembly with freshwater and reset to the set condition after each operation.

When installing the valve in a corrosive environment, including outdoor locations, protection from moisture, chemicals or fumes is highly recommended. Galvanic corrosion can result from joining unprotected dissimilar metals. For example, exposed steel pipe threads can become corroded if unprotected by painting or other coating methods. Where coating such exposed surfaces is impractical or unwanted, construct a rain-resistant roof or enclosure over the valve and trim.

Proper operation of the DV-5A deluge valve wet pilot depends upon its trim being installed in accordance with the instructions given in this technical data sheet. Failure to follow the appropriate trim diagram may prevent the DV-5A valve from functioning properly, as well as void approvals and the manufacturer's warranties.

The DV-5A deluge valve wet pilot must be installed in a readily visible and accessible location.

The DV-5A valve, associated trim, and wet pilot lines must be maintained at a minimum temperature of 40°F (4°C).

Heat tracing of the DV-5A valve or its associated trim is not permitted. Heat tracing can result in the formation of hardened mineral deposits that are capable of preventing proper operation.

Always open the system control valves slowly to avoid a sudden rush of water entering the system.

The DV-5A valve is to be installed in accordance with the following criteria:

Step 1. All nipples, fittings, and devices must be clean and free of scale and burrs before installation. Use pipe thread sealant sparingly on male pipe threads only.

Step 2. The DV-5A deluge valve wet pilot actuation must be trimmed as shown in Figure 5.

Note: *If the addition of an alarm control valve is desired or required by the local AHJ, the alarm control valve noted as Item H in Figure 16 is to be a separately ordered electronically supervised normally open valve.*

Step 3. Care must be taken to ensure that check valves, strainers, globe valves, etc. are installed with the flow arrows in the proper direction.

Step 4. Drain tubing to the drip funnel must be installed with smooth bends that will not restrict flow.

Supply Pressure psi (bar)[1]	Maximum Pilot Height[2] Feet (Meters)					
	1 1/2 (DN40)	2 (DN50)	3 (DN80)	4 (DN100)	6[4] (DN150)	8 (DN200)
20 (1,4)	13 (4)	13 (4)	4 (1)	9 (3)	12 (4)	15 (5)
40 (2,8)	34 (10)	34 (10)	29 (9)	33 (10)	27 (8)	23 (7)
60 (4,1)	55 (17)	55 (17)	54 (16)	57 (17)	42 (13)	31 (9)
80 (5,5)	76 (23)	76 (23)	79 (24)	81 (25)	57 (17)	39 (12)
100 (6,9)	97 (30)	97 (30)	103 (31)	105 (32)	73 (22)	46 (14)
120 (8,3)	118 (36)	118 (36)	128 (39)	129 (39)	88 (27)	54 (16)
140 (9,7)	139 (42)	139 (42)	153 (47)	153 (47)	103 (31)	62 (19)
160 (11,0)	160 (49)	160 (49)	178 (54)	177 (54)	118 (36)	70 (21)
175 (12,1)	172 (52)	172 (52)	188 (57)	195 (59)	131 (40)	75 (23)
200 (13,8)	201 (61)	201 (61)	203 (62)	224 (68)	152 (48)	84 (26)
225 (15,5)	226 (69)	226 (69)	219 (67)	254 (77)	173 (53)	92 (28)
250 (17,2)	252 (77)	252 (77)	235 (72)	284 (87)	195 (59)	100 (30)
275 (19,0)	277 (84)	277 (84)	247 (75)	308 (94)	212 (65)	107 (33)
300 (20,7)	303 (92)	303 (92)	266 (81)	347 (106)	237 (72)	124 (38)

NOTES
1. If supply pressure is variable, assume minimum expected value.
2. Maximum pilot height for up to 500 ft (150 m) of equivalent length of pilot line (pipe plus fittings).
3. Interpolation between data points is permitted.
4. Also applicable to metric 165,1 mm size.

TABLE B
DV-5A VALVE
WET PILOT DESIGN CRITERIA FOR UP TO
500 FEET (150 METERS) OF EQUIVALENT LENGTH OF 1/2 INCH (DN15) PILOT LINE
(PIPE PLUS FITTINGS)

Step 5. The main drain and drip funnel drain may be interconnected provided a check valve is located at least 12 in. (300 mm) below the drip funnel.

Step 6. Suitable provision must be made for disposal of drain water. Drainage water must be directed such that it will not cause accidental damage to property or danger to persons.

Step 7. Connect the diaphragm supply valve to the inlet side of the system main control valve in order to facilitate setting of the DV-5A valve. See Figure 8.

Step 8. An inspector's test connection, as described in the Wet Pilot Actuation section, must be provided for wet pilot actuation system.

Step 9. Unused pressure alarm wwitch connections must be plugged.

Step 10. Conduit and electrical connections are to be made in accordance with the applicable standards of the approval agency.

Step 12. Before a system hydrostatic test is performed, the DV-5A diaphragm chamber is to be depressurized, the automatic drain valve is to be temporarily replaced with a plug, and the diaphragm cover bolts must be uniformly and securely tightened using a cross-draw sequence**.** After tightening, double-check to make certain that all of the diaphragm cover bolts are securely tightened. See Table C in the Care and Maintenance section for torque specifications.

Valve Setting Procedure

Perform Steps 1 through 13 when initially setting the TYCO DV-5A Valve, after an operational test of the fire protection system, or after system operation due to a fire. See Figure 8.

Step 1. Close the system main control valve (B).

Step 2. Close the diaphragm supply valve (P).

Step 3. Open the main drain valve (D), system drain valve (E), and all auxiliary drains in the system. Close the auxiliary drain valves and the system drain valve (E) after water ceases to discharge. Leave the main drain valve (D) open.

At this time make certain that the pressure gauge valves and the alarm control valve (H), as applicable, are open.

Step 4. Depress the plunger of the automatic drain valve (F) to verify that it is open.

Step 5. Clean the diaphragm supply strainer (Q) by removing the cleanout plug and strainer basket. The diaphragm supply strainer (Q) may be flushed out by momentarily opening the diaphragm supply valve (P).

Step 6. Reset the automatic wet pilot actuation by replacing operated pilot sprinklers and/or reset the remote manual control stations.

NOTICE

In order to prevent the possibility of a subsequent operation of an overheated solder type pilot sprinkler, any solder type pilot sprinklers that were possibly exposed to a temperature greater than their maximum rated ambient must be replaced.

Step 7. Operate (open) the manual control station (M) and then open the diaphragm supply valve (P). After unaerated water ceases to discharge from the manual control station (M) drain tube, slowly close the operating lever by pushing it up. Do not close the hinged cover at this time.

Step 8. After allowing water to flow out of the manual reset actuator (N) drain tube until aerated water ceases to discharge, reset the manual reset actuator (N) by pressing the reset knob and hold until water stops flowing from its drain tube and the pressure builds and reaches approximately 15 psi (1,0 bar) on the diaphragm gauge (K). Pressure will then build up in the DV-5A diaphragm chamber.

Crack open the inspector's test connection and any other vent valves on the wet pilot line to relieve trapped air. After the discharge of air has stopped, close the vent valves and the inspector's test connection.

Note: *After relieving trapped air, check the manual reset actuator (N) to make sure there is no water draining from its drain tube. If water is draining, reset the manual reset actuator (N) as previously instructed.*

Step 9. Verify the ability for the DV-5A diaphragm to hold pressure as follows:

- With the diaphragm chamber pressurized per Step 8, temporarily close the diaphragm supply valve (P), and then observe the diaphragm gauge (K) for a drop in pressure.
- If a drop in pressure is noted, the DV-5A diaphragm is to be replaced and/or any leaks must be corrected before proceeding to the next step.
- If the diaphragm gauge (K) indicates no drop in pressure, re-open the diaphragm supply valve (P) and proceed to the next step.

Step 10. Partially open the system main control valve (B). Slowly close the main drain valve (D) as soon as water discharges from the main drain valve (D). Observe the automatic drain valve (F) for leaks. If there are leaks, determine/correct the cause of the leakage problem before proceeding.

NOTICE

When the system main control valve (B) is partially opened, the pressure on the DV-5A diaphragm chamber may increase. This increase in pressure is normal, and if the pressure is greater than the valve trim maximum pressure rating provided in the Technical Data section, the pressure is to be relieved to at least the valve trim pressure rating by partially and temporarily opening the manual control station (M); however, do not allow the pressure as indicated on the diaphragm gauge (K) to drop below the supply pressure shown on the water supply gauge (J), since this action may result in tripping of the DV-5A valve.

Step 11. Close the hinged cover of the manual control station (M), and insert a new break rod in the small hole through the top of the enclosing box.

Step 12. Fully open the system main control valve (B).

Step 13. After setting a fire protection system, notify the proper authorities and advise those responsible for monitoring proprietary and/or central station alarms.

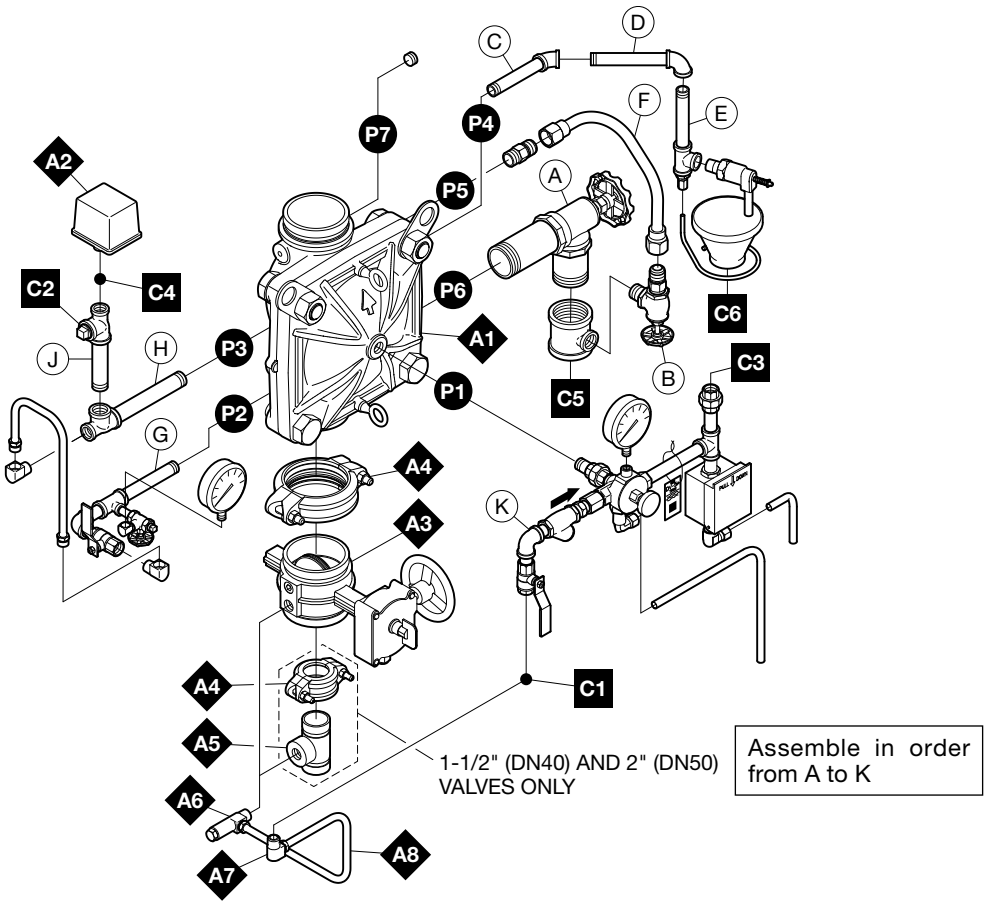

NOTES
1. Port Connections P1 through P7 are described in Figure 2.
2. External Trim Connections C1 through C6 are described in Figure 8.
3. When ordering pre-assembled "DV-5A Valve with Galvanized Trim" or pre-assembled "DV-5A Valve with Galvanized Trim and Butterfly Valve", Items A1 through A8 are provided, as applicably related to valve size.
4. When ordering DV-5A Trim separately from the DV-5A Valve, Items A1 through A8 are separately ordered, as applicably related to valve size. Water Pressure Gauges for EMEA valve trim are also separately ordered.

FIGURE 5
DV-5A VALVE
DELUGE WET PILOT ACTUATION TRIM
SEMI-ASSEMBLED

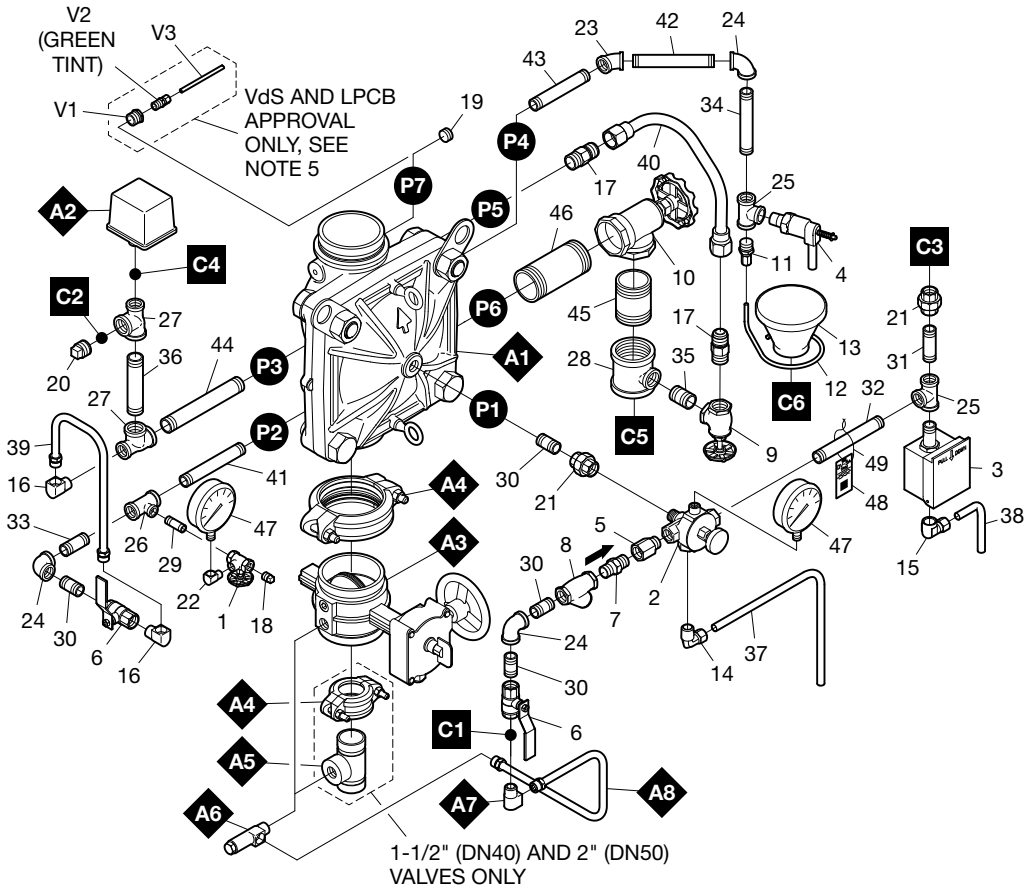

NOTES

1. Port Connections P1 through P7 are described in Figure 2.
2. External Trim Connections C1 through C6 are described in Figure 8.
3. When ordering pre-assembled "DV-5A Valve with Galvanized Trim" or pre-assembled "DV-5A Valve with Galvanized Trim and Butterfly Valve", Items A1 through A8 are provided, as applicably related to valve size.
4. When ordering DV-5A Trim separately from the DV-5A Valve, Items A1 through A8 are separately ordered, as applicably related to valve size. Water Pressure Gauges for EMEA valve trim are also separately ordered.
5. V1 through V3 Water Column Prevention Drain Components are required for VdS and LPCB Approval.

ITEM	QTY.	DESCRIPTION	CH	1 1/2 IN. (DN40)	2 IN. (DN50)	3 IN. (DN80)	4 IN. (DN100)	6 IN. (DN150)[b]	8 IN. (DN200)
1	1	1/4" GAUGE TEST VALVE		460051003	460051003	460051003	460051003	460051003	460051003
2	1	MRA-1 MANUAL RESET ACTUATOR		545001000	545001000	545001000	545001000	545001000	545001000
3	1	MC-2 MANUAL CONTROL STATION		545002000	545002000	545002000	545002000	545002000	545002000
4	1	AD-3 AUTOMATIC DRAIN VALVE		547932004	547932004	547932004	547932004	547932004	547932004
5	1	PRIMING SUPPLY RESTRICTION		545100051	545100051	545100051	545100051	545100051	545100051
6	2	1/2" BALL VALVE		460501004	460501004	460501004	460501004	460501004	460501004
7	1	1/2" SPRING LOADED CHECK VALVE		923221003	923221003	923221003	923221003	923221003	923221003
8	1	1/2" Y-STRAINER		523531006	523531006	523531006	523531006	523531006	523531006
9	1	3/4" ANGLE VALVE		460481010	460481010	460481010	460481010	460481010	460481010
10	1	ANGLE VALVE		460481010	460481010	460481011	460481012	460481012	460481012
11	1	DRIP FUNNEL BRACKET CONNECTOR		922111005	922111005	922111005	922111005	922111005	922111005
12	1	DRIP FUNNEL BRACKET		922111003	922111003	922111003	922111003	922111003	922111003
13	1	DRIP FUNNEL		923431007	923431007	923431007	923431007	923431007	923431007
14	1	COMP. FITTING 90° 1/2" MNPT x 1/2" OD TUBE	✓	—	—	—	—	—	—
15	1	COMP. FITTING 90° 1/2" FNPT x 1/2" OD TUBE	✓	—	—	—	—	—	—
16	2	FLARE FITTING 90° 1/2" NPT x 1/2" TUBE		545100062	545100062	545100062	545100062	545100062	545100062
17	2	FLARE FITTING 3/4" NPT x 3/4" TUBE		545100063	545100063	545100063	545100063	545100063	545100063
18	1	PIPE PLUG	✓	1/4"	1/4"	1/4"	1/4"	1/4"	1/4"
19	1	PIPE PLUG, SOCKET HEAD	✓	1/2"	1/2"	1/2"	1/2"	1/2"	1/2"
20	1	PIPE PLUG	✓	3/4"	3/4"	3/4"	3/4"	3/4"	3/4"
21	2	UNION	✓	1/2"	1/2"	1/2"	1/2"	1/2"	1/2"
22	1	STREET ELBOW	✓	1/4" x 90°	1/4" x 90°	1/4" x 90°	1/4" x 90°	1/4" x 90°	1/4" x 90°
23	1	ELBOW	✓	1/2" x 45°	1/2" x 45°	1/2" x 45°	1/2" x 45°	1/2" x 45°	1/2" x 45°
24	3	ELBOW	✓	1/2" x 90°	1/2" x 90°	1/2" x 90°	1/2" x 90°	1/2" x 90°	1/2" x 90°
25	2	TEE	✓	1/2"	1/2"	1/2"	1/2"	1/2"	1/2"
26	1	REDUCING TEE	✓	1/2" x 1/2" x 1/4"	1/2" x 1/2" x 1/4"	1/2" x 1/2" x 1/4"	1/2" x 1/2" x 1/4"	1/2" x 1/2" x 1/4"	1/2" x 1/2" x 1/4"
27	2	REDUCING TEE	✓	3/4" x 1/2" x 3/4"	3/4" x 1/2" x 3/4"	3/4" x 1/2" x 3/4"	3/4" x 1/2" x 3/4"	3/4" x 1/2" x 3/4"	3/4" x 1/2" x 3/4"
28	1	REDUCING TEE	✓	3/4" x 3/4" x 3/4"	3/4" x 3/4" x 3/4"	1-1/4" x 1-1/4" x 3/4"	2" x 2" x 3/4"	2" x 2" x 3/4"	2" x 2" x 3/4"
29	1	PIPE NIPPLE	✓	1/4" x 1 1/2"	1/4" x 1 1/2"	1/4" x 1 1/2"	1/4" x 1 1/2"	1/4" x 1 1/2"	1/4" x 1 1/2"
30	4	PIPE NIPPLE	✓	1/2" x 1 1/2"	1/2" x 1 1/2"	1/2" x 1 1/2"	1/2" x 1 1/2"	1/2" x 1 1/2"	1/2" x 1 1/2"
31	1	PIPE NIPPLE	✓	1/2" x 2 1/2"	1/2" x 2 1/2"	1/2" x 2 1/2"	1/2" x 2 1/2"	1/2" x 2 1/2"	1/2" x 2 1/2"

FIGURE 6 (1 OF 2)
DV-5A VALVE — DELUGE WET PILOT ACTUATION TRIM — EXPLODED VIEW

ITEM	QTY.	DESCRIPTION	CH	1-1/2 IN. (DN40)	2 IN. (DN50)	3 IN. (DN80)	4 IN. (DN100)	6 IN. (DN150)[b]	8 IN. (DN200)
32	1	PIPE NIPPLE	✓	1/2" x 4 1/2"	1/2" x 4 1/2"	1/2" x 4 1/2"	1/2" x 4 1/2"	1/2" x 4 1/2"	1/2" x 4 1/2"
33	1	PIPE NIPPLE	✓	1/2" x 2"	1/2" x 2"	1/2" x 2"	1/2" x 2"	1/2" x 2"	1/2" x 2"
34	1	PIPE NIPPLE	✓	1/2" x 5"	1/2" x 5"	1/2" x 5"	1/2" x 5"	1/2" x 5"	1/2" x 5"
35	1	PIPE NIPPLE	✓	3/4" x 1 1/2"	3/4" x 1 1/2"	3/4" x 1 1/2"	3/4" x 1 1/2"	3/4" x 1 1/2"	3/4" x 1 1/2"
36	1	PIPE NIPPLE	✓	3/4" x 4 1/2"	3/4" x 4 1/2"	3/4" x 4 1/2"	3/4" x 4 1/2"	3/4" x 4 1/2"	3/4" x 4 1/2"
37	1	TUBING, MRA-1 DRAIN		545100065	545100065	545100066	535002140	535002160	535002180
38	1	TUBING, MC-2 DRAIN		535000220	535000220	535000230	535000240	535000260	535000280
39	1	TUBING ASSY, ALARM TEST INTERCONNECT		535000320	535000320	535000330	535000340	535000360	535000380
40	1	TUBING ASSY, SYSTEM DRAIN		535000420	535000420	535000430	535000440	535000460	535000480
41	1	PIPE NIPPLE	✓	1/2" x 3 1/2"	1/2" x 3 1/2"	1/2" x 4 1/2"	1/2" x 5 1/2"	1/2" x 5 1/2"	1/2" x 6 3/4"
42	1	PIPE NIPPLE	✓	1/2" x 5"	1/2" x 5"	1/2" x 5 1/2"	1/2" x 5 1/2"	1/2" x 5 1/2"	1/2" x 6 1/2"
43	1	PIPE NIPPLE	✓	1/2" x 5"	1/2" x 5"	1/2" x 4 1/2"	1/2" x 5"	1/2" x 7 1/2"	1/2" x 9 1/2"
44	1	PIPE NIPPLE	✓	3/4" x 5"	3/4" x 5"	3/4" x 6"	3/4" x 7"	3/4" x 9"	3/4" x 11 1/2"
45	1	PIPE NIPPLE	✓	3/4" x 4 1/2"	3/4" x 4 1/2"	1 1/4" x 3 1/4"	2" x 3"	2" x 3"	2" x 3"
46	1	PIPE NIPPLE	✓	3/4" x 6 1/2"	3/4" x 6 1/2"	1 1/4" x 5 1/2"	2" x 5"	2" x 6"	2" x 8"
47	2	WATER PRESSURE GAUGE, 300 PSI / 2000 kPa (AMER/APAC)		923431005	923431005	923431005	923431005	923431005	923431005
	2	WATER PRESSURE GAUGE, 20 bar / 2000 kPa (EMEA)		025500013	025500013	025500013	025500013	025500013	025500013
48	1	LABEL		545003001	545003001	545003001	545003001	545003001	545003001
49	1	LABEL WIRE		—	—	—	—	—	—
A1	1	DV-5A Valve		SEE ORDERING PROCEDURE, SEPARATE DV-5A VALVES WITHOUT TRIM, FOR PART NUMBERS.					
A2	1	WATERFLOW PRESSURE ALARM SWITCH, DOUBLE CONTACTS (APAC)		25710 or 100102	25710 or 100102	25710 or 100102	25710 or 100102	25710 or 100102	25710 or 100102
	1	WATERFLOW PRESSURE ALARM SWITCH, SINGLE CONTACTS (EMEA)		0260 or 100101	0260 or 100101	0260 or 100101	0260 or 100101	0260 or 100101	0260 or 100101
	1	WATERFLOW PRESSURE ALARM SWITCH, DOUBLE CONTACTS (AMER)		25710	25710	25710	25710	25710	25710
A3	1	BUTTERFLY VALVE, 1-1/2" G x G		51024A	51021A	—	—	—	—
	1	BFV-300 BUTTERFLY VALVE, G x G		—	—	59300G030WS	59300G040WS	59300G060WS	59300G080WS
A4	2	FIGURE 577 RIGID GROOVED COUPLING		57715ACP	57720ACP	—	—	—	—
	1	FIGURE 577 RIGID GROOVED COUPLING		—	—	57730ACP	57740ACP	57760ACP	57780ACP
A5	1	GROOVE x THREADED OUTLET WELDED TEE		545004000	545004001	—	—	—	—
A6	1	INVERTED FLARE SHUT-OFF VALVE[a]		545100100	545100100	545100099	545100100	545100100	545100100
A7	1	FLARE FITTING 90° 1/2" NPT x 1/2" TUBE		545100062	545100062	545100062	545100062	545100062	545100062
A8	1	TUBING ASSY, DIAPHRAGM CHAMBER SUPPLY		540000015	540000020	540000030	540000040	540000060	540000080
V1	1	REDUCING BUSHING	✓	1/2" x 1/4"	1/2" x 1/4"	1/2" x 1/4"	1/2" x 1/4"	1/2" x 1/4"	1/2" x 1/4"
V2	1	3/32" VENT FITTING		920321002	920321002	920321002	920321002	920321002	920321002
V3	1	TUBING, VENT TRIM DRAIN		923041035	923041035	923041035	923041035	923041035	923041035

NOTES
a. Not VdS Approved
b. Also applicable to metric 165,1 mm size.
CH - Common Hardware - Refer to Materials of Construction section for specifications.

FIGURE 6 (2 OF 2)
DV-5A VALVE — DELUGE WET PILOT ACTUATION TRIM — EXPLODED VIEW

Nominal Valve Size ANSI Inches (DN)	Inches (mm)								
	A	B	C	D	E	F	G	H	J
1 1/2 (40)	2.8 (71)	9.7 (246)	9.8 (249)	12.5 (317)	16 (406)	7.4 (188)	10.2 (259)	8.02 (204)	1.2 (31)
2 (50)	2.8 (71)	9.7 (246)	9.8 (249)	12.5 (317)	16 (406)	7.4 (188)	10.2 (259)	8.09 (205)	2.9 (74)
3 (80)	4.0 (102)	10.7 (272)	11.5 (292)	13.1 (333)	17.8 (452)	6.2 (158)	13.8 (351)	3.79 (96)	3.6 (91)
4 (100)	4.5 (114)	11.9 (302)	12.6 (320)	14.1 (358)	19.3 (490)	5.5 (140)	16.8 (427)	4.54 (115)	4.3 (109)
6[3] (150)	5.7 (145)	13.4 (340)	14.5 (368)	16.4 (417)	22.4 (569)	3.8 (97)	22.4 (569)	5.83 (148)	5.7 (145)
8 (200)	5.7 (145)	16.1 (409)	16.7 (424)	19.5 (495)	27.5 (699)	3.3 (84)	27.5 (699)	5.24 (133)	6.7 (170)

NOTES
1. Dimensions based on drain valves being open.
2. Dimensions do not provide installation clearance.
3. Also applicable to metric 165,1 mm size.

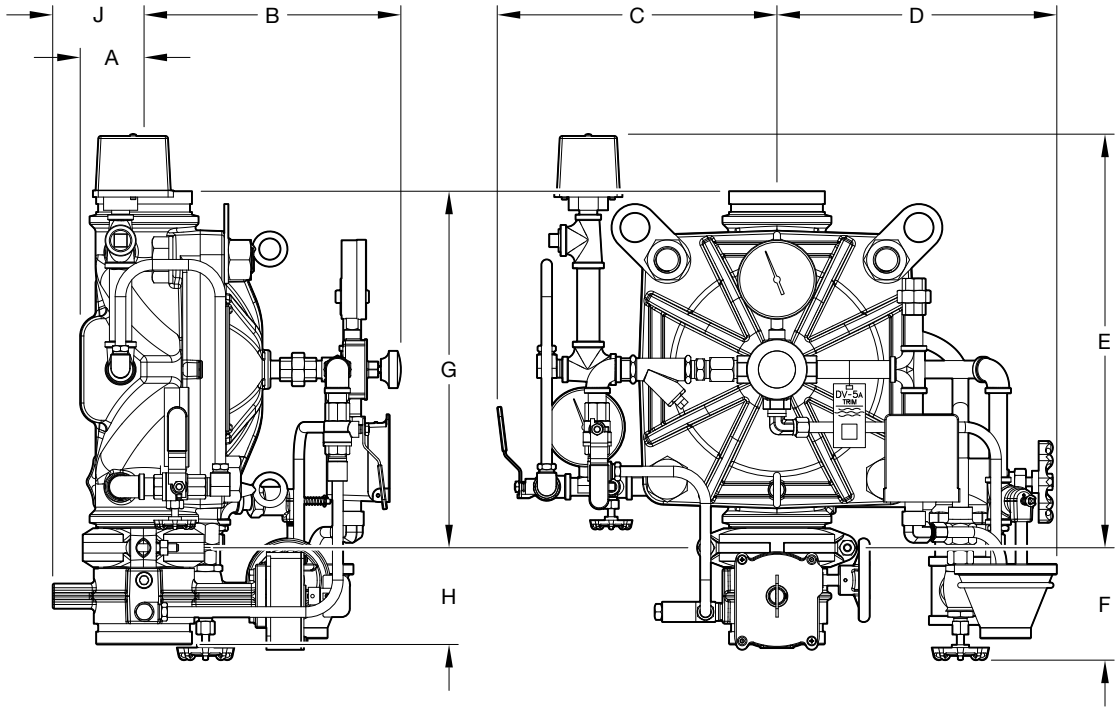

FIGURE 7
DV-5A VALVE
DELUGE WET PILOT ACTUATION TRIM ASSEMBLY
NOMINAL DIMENSIONS

Care and Maintenance

The following procedures and inspections must be performed as indicated, in addition to any specific requirements of the NFPA and any applicable standards recognized by the Approval agency. Any impairment must be immediately corrected. See Figure 8.

NOTICE

If the water supply needs to be shut off to the DV-5A valve and trim and cannot be shut off upstream of the system, close the system main control valve (B), the diaphragm supply valve (P), and the inverted flare shut-off valve (R). This will allow any trim above the system main control valve (B) to be taken apart for service if necessary.

The frequency at which the following procedures and inspections are to be performed are to be in accordance with the NFPA and any applicable specific requirements of the standards recognized by the Approval agency.

Before closing a fire protection system main control valve for maintenance work on the fire protection system that it controls, permission to shut down the affected fire protection systems must first be obtained from the proper authorities and all personnel who may be affected by this action must be notified.

The owner is responsible for the inspection, testing, and maintenance of their fire protection system and devices in compliance with this document, as well as with the NFPA and any applicable standards recognized by the Approval agency. Contact the installing contractor or product manufacturer with any questions.

Some procedures in this section result in the operation of the associated alarms. Notify the owner and the fire department, central station, or other signal station to which the alarms are connected before performing the tests.

It is recommended that automatic sprinkler systems be inspected, tested, and maintained by a qualified Inspection Service in accordance with the NFPA and any applicable standards recognized by the Approval agency.

Drop in Water Supply Pressure Below Normal Range

NOTICE

If the water supply pressure is significantly reduced below the normally expected static pressure range (as could occur in the case of a water main break or repair), and there is a subsequent drop in the diaphragm chamber water pressure below its normal range (for example, due to a leak in a piping connection to or from the diaphragm chamber or, a leak in the diaphragm chamber check valve caused by dirt or debris in the check valve seal area), a deluge valve such as the DV-5A could inadvertently trip, if its water supply pressure is quickly restored.

A drop in the water supply pressure to below its normal range (as in the case of an interrupted water supply condition) constitutes an emergency impairment.

Should this condition occur, immediately close the system main control valve (B) and use the following procedure to reset the system:

Step 1. Prior to the water supply pressure being restored to the closed system main control valve (B), note the pressure indicated by the diaphragm gauge (K) and determine if the pressure is within the normally expected range.

Step 2. If the diaphragm chamber pressure is below the normal range, check for and correct any source of leakage from the diaphragm chamber prior to resetting the system.

Step 3. After the water supply pressure is restored to the system main control valve (B), reset the DV-5A valve in accordance with the Valve Setting Procedure section.

NOTICE

For fire protection systems subject to an emergency impairment caused by an interrupted water supply condition, it is recommended that consideration be given to installing a low water supply pressure switch with the appropriate alarm/indications to monitor the water supply pressure.

Waterflow Alarm Test Procedure

To test the waterflow alarm, open the alarm test valve (G), which will allow a flow of water to the waterflow pressure switch (C) and/or water motor alarm. Upon satisfactory completion of the test, close the alarm test valve (G).

To ensure drainage of the alarm line, depress the plunger on the automatic drain valve (F).

Wet Pilot Actuation Operation Test Procedure

Proper operation of the DV-5A valve, such as opening of the DV-5A valve as during a fire condition, must be verified as follows:

Step 1. If water must be prevented from flowing beyond the riser, perform the following steps:

- Close system main control valve (B). Open main drain valve (D).
- Open system main control valve (B) one turn beyond position at which water just begins to flow from main drain valve (D).
- Slowly close the main drain valve (D).

Step 2. Open the inspector's test connection.

Note: *Be prepared to quickly perform Steps 3, 4, and 5 if water must be prevented from flowing beyond the riser.*

Step 3. Verify that the DV-5A valve has tripped, as indicated by the flow of water into the system.

Step 4. Close the system main control valve (B).

Step 5. Close the diaphragm supply valve (P).

Step 6. Reset the DV-5A valve in accordance with the Valve Setting Procedure.

Item	Description
A	DV-5A Valve
B	System Main Control Valve
C	Waterflow Pressure Switch
D	Main Drain Valve
E	System Drain Valve
F	Automatic Drain Valve
G	Alarm Test Valve
H	Alarm Control Valve (Optional)

Item	Description
J	Water Supply Gauge
K	Diaphragm Gauge
L	System Gauge (Optional)
M	Manual Control Station
N	Manual Reset Actuator
P	Diaphragm Supply Valve
Q	Diaphragm Supply Strainer
R	Inverted Flare Shut-Off Valve

Item	External Trim Connections
C1	Diaphragm Supply Connection
C2	Water Motor Alarm Connection
C3	Wet Pilot Line Connection
C4	Waterflow Pressure Alarm Switch Connection
C5	Main Drain Connection
C6	Drip Funnel Drain Connection

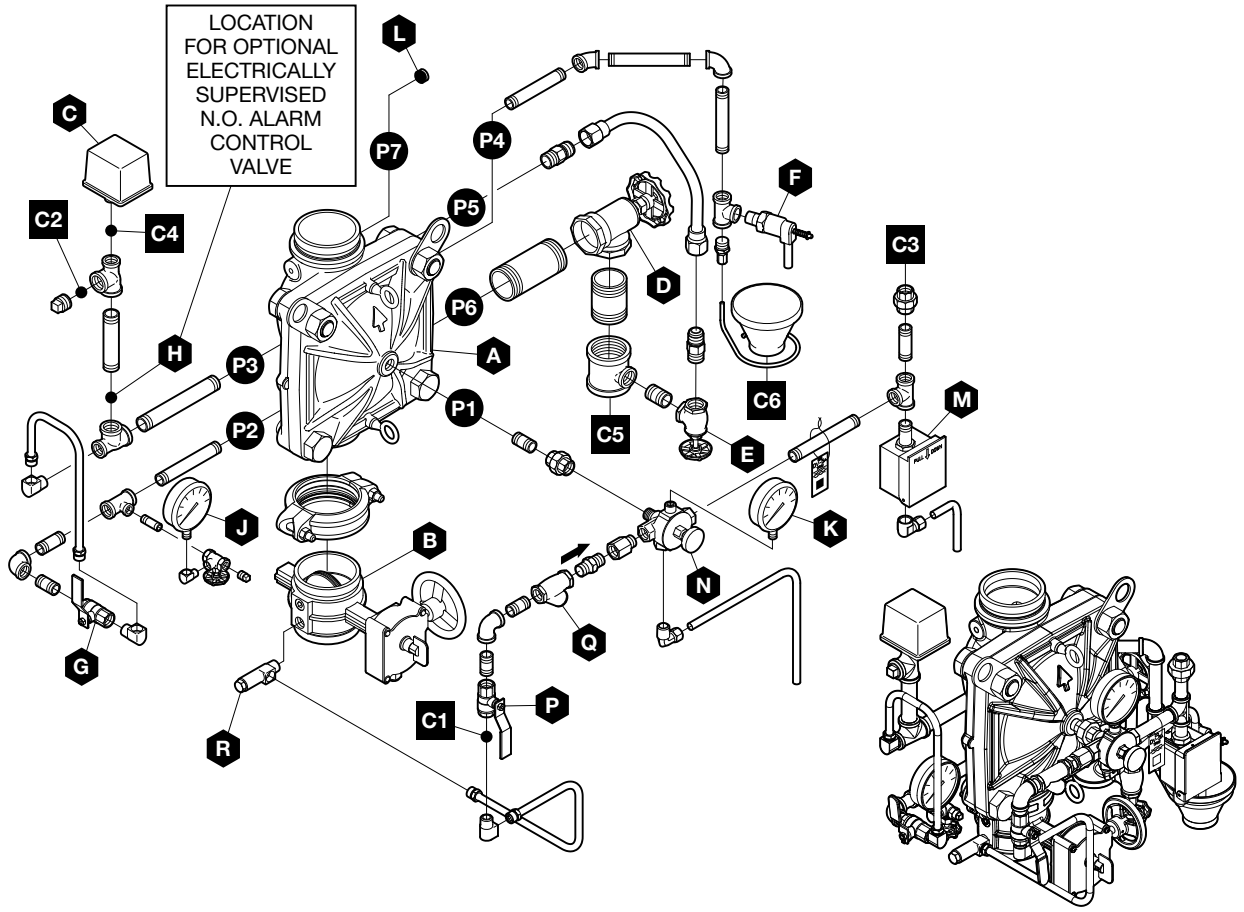

NOTES
Port Connections P1 through P7 are described in Figure 2.

FIGURE 8
DV-5A VALVE
DELUGE WET PILOT ACTUATION TRIM
(REFER TO FIGURE 6 FOR SPECIFIC BILLS OF MATERIALS)

Internal Valve Inspection
Once every five years during the annual operational test procedure, and prior to the DV-5A valve being reset and the DV-5A valve de-pressurized, the interior of the DV-5A valve must be cleaned and inspected for wear and damage. Damaged or worn parts must be replaced. Replacement of the diaphragm every ten years is recommended, or more frequently if inspections and/or wear and tear of the diaphragm warrants more frequent replacement.

NOTICE

The diaphragm cover may be removed between Steps 4 and 5 of the Valve Setting Procedure instructions, since at that point the DV-5A valve should be de-pressurized as evident by a zero gauge reading on the diaphragm gauge (K) and water supply gauge (J), as well as no water discharging from the automatic drain valve (F).

To perform internal valve inspection between Steps 4 and 5 of the Valve Setting Procedure, remove the diaphragm cover as follows:

Step 1. Close the inverted flare shut-off valve (R).

Step 2. Remove the copper tube fitting between the diaphragm supply valve (P) and the inverted flare shut-off valve (R).

Step 3. Loosen the union securing the wet pilot actuation trim and remove the wet pilot actuation trim.

Step 4. Loosen and remove the union between the diaphragm cover and the MRA-1 manual reset actuator (N) and remove the MRA-1 manual reset actuator (N) subassembly.

Step 5. Remove the diaphragm valve cover hardware, then slowly remove the diaphragm cover and perform internal valve inspection. Clean the valve interior and replace parts as necessary.

Note: *For wrench and socket sizes, see Table C.*

After cleaning and inspecting valve interior, and replacing parts as necessary, reinstall the diaphragm cover by completing the following steps to assure the diaphragm cover fasteners are uniformly and securely tightened.

Step 1. With reference to Figure 1, ensure that the diaphragm is properly oriented and that the proper hardware arrangement is utilized when assembling the diaphragm covers. The hardware arrangements differ depending on the size of the DV-5A valve.

Step 2. By first using the long hex bolts, support of the diaphragm cover will be provided before installing the short hex bolts. Align diaphragm in proper orientation with valve body, and then align diaphragm cover in proper orientation with valve body. Hand-tighten all fasteners.

Step 3. Using crossdraw sequence to assure uniformity, wrench-tighten long hex bolts and short hex bolts to appropriate torque values. Repeat crossdraw sequence two to three times at incremental torque valves until reaching the torque valves found in Table C.

Step 4. Inspect to assure all hex bolts are securely tightened.

Step 5. Using the union, secure the MRA-1 manual reset actuator to the diaphragm cover.

Step 6. Using the union, secure the wet pilot actuation trim.

Step 7. Replace the copper tube fitting between the diaphragm supply valve (P) and the inverted flare shut-off valve (R).

Step 8. Ensure that the unions and flare fittings are securely tightened.

Step 9. With the diaphragm supply valve (P) closed, fully open the inverted flare shut-off valve (R) stainless steel screw (approximately ½ in.) until resistance is met so as not to break the internal roll-pin. The internal roll-pin stops the removal of the inverted flare shut-off valve (R) stainless steel screw.

Step 10. Proceed with Step 5 of the Valve Setting Procedures section in this data sheet.

Nominal Valve Sizes ANSI Inches (DN)	Wrench and Socket Size in.	Torque lb-ft (N·m)	
		Nuts	Short Hex Bolts
1 1/2 (40)	13/16	44 (59,7)	35 (47,5)
2 (50)		44 (59,7)	35 (47,5)
3 (80)	1-5/16	125 (169,5)	125 (169,5)
4 (100)	1-7/8	150 (203,4)	150 (203,4)
6[1] (150)	1-1/2	150 (203,4)	150 (203,4)
8 (200)	1-7/8	188 (254,9)	188 (254,9)

NOTES
1. Also applicable to metric 165,1 mm size.

TABLE C
DIAPHRAGM COVER BOLTS WRENCH AND SOCKET SIZES AND MINIMUM TORQUE

NOTICE

If the water supply contains chemicals which tend to attack a polyester fabric-reinforced, EPDM rubber or the five year inspection indicates a build-up of debris within the DV-5A valve that could affect its proper operation, then the frequency of the internal valve inspection procedure must be appropriately increased.

With reference to Figure 1, make certain that the diaphragm is correctly oriented; otherwise, the DV-5A deluge valve cannot be properly set.

Under-tightening the diaphragm cover bolts can result in internal and external leakage.

Use only TYCO replacement fasteners as specified in Figure 1.

Do not apply adhesives, lubricants, or other substances to the diaphragm or valve body.

Limited Warranty

For warranty terms and conditions, visit www.tyco-fire.com.

Ordering Procedure

The TYCO DV-5A Automatic Water Control Valve Wet Pilot Actuation may be ordered as follows:

Pre-Assembled Valves with Trim

DV-5A Valves with Galvanized Trim and Butterfly Valve

Specify: Size (specify), DV-5A Automatic Water Control Valve, G x G connections with assembled galvanized Americas Wet Pilot Actuation Trim, complete with assembled Model BFV-300 Butterfly Valve, P/N (specify):

1 1/2 in. (DN40) 551010115
2 in. (DN50) 551010120
3 in. (DN80) 551010130
4 in. (DN100). 551010140
6 in. (DN150). 551010160
8 in. (DN200) 551010180

Note: *Americas pressure switches and psi/kPa water pressure gauges are provided.*

This arrangement is available for EMEA and APAC upon request. Contact your local distributor.

AMERICAS

DV-5A Valves with Galvanized Trim

Specify: Size (specify), DV-5A Automatic Water Control Valve, (specify) end connection with assembled galvanized Americas, Wet Pilot Actuation Trim, P/N (specify):

Groove x Groove
1 1/2 in. (DN40) 550010115
2 in. (DN50) 550010120
3 in. (DN80) 550010130
4 in. (DN100). 550010140
6 in. (DN150). 550010160
8 in. (DN200) 550010180

Flange x Flange ANSI
3 in. (DN80) 550020130
4 in. (DN100). 550020140
6 in. (DN150). 550020160
8 in. (DN200) 550020180

Note: *Pressure switches and psi/kPa water pressure gauges are provided.*

Separate DV-5A Valves without Trim

See Table A for flange drilling specifications.

Specify: Size (specify), DV-5A Automatic Water Control Valve, (specify) end connection, P/N (specify):

Groove x Groove
1 1/2 in. (DN40) 530010015
2 in. (DN50) 530010020
3 in. (DN80) 530010030
4 in. (DN100). 530010040
6 in. (DN150). 530010060
8 in. (DN200) 530010080

Flange x Flange ANSI
3 in. (DN80) 530020030
4 in. (DN100). 530020040
6 in. (DN150). 530020060
8 in. (DN200) 530020080

Note: *Valves are typically provided with flange drilling per ANSI B16.42 (Class 150) or ISO (7005-2 PN16).*

Upon request, valves can be provided with flange drilling per JIS B 2210 or AS 2129. In which case part numbers are not assigned.

DV-5A Valve Trim Semi-Assembled

Specify: Size (specify), finish (specify), Wet Pilot Actuation Trim for DV-5A Automatic Water Control Valves used in Deluge Fire Protection System, P/N (specify):

Galvanized
1 1/2 in. (DN40) 540000120
2 in. (DN50) 540000120
3 in. (DN80) 540000130
4 in. (DN100). 540000140
6 in. (DN150). 540000160
8 in. (DN200) 540000180

EMEA

DV-5A Valves with Galvanized Trim

Specify: Size (specify), DV-5A Automatic Water Control Valve, (specify) end connection with assembled galvanized EMEA, Wet Pilot Actuation Trim, P/N (specify):

Groove x Groove
1 1/2 in. (DN40) 550110115
2 in. (DN50) 550110120
3 in. (DN80) 550110130
4 in. (DN100). 550110140
6 in. (DN150). 550110160
165,1 mm 550110166
8 in. (DN200) 550110180

Flange x Flange ANSI
3 in. (DN80) 550120130
4 in. (DN100). 550120140
6 in. (DN150). 550120160
8 in. (DN200) 550120180

Flange x Flange ISO
3 in. (DN80) 550140130
4 in. (DN100). 550140130
6 in. (DN150). 550140160
8 in. (DN200) 550140180

Note: *Pressure switches, bar/psi water pressure gauges, and NPT to ISO threaded trim adaptors for external connections are provided.*

VdS and LPCB Approved DV-5A Valves with Galvanized Trim

Specify: VdS and LPCB Approved, Size (specify), DV-5A Automatic Water Control Valve, (specify) end connection with assembled galvanized Wet Pilot Actuation Trim, P/N (specify):

Groove x Groove
1 1/2 in. (DN40) 550110115VDS
2 in. (DN50) 550110120VDS
3 in. (DN80) 550110130VDS
4 in. (DN100). 550110140VDS
6 in. (DN150). 550110160VDS
8 in. (DN200) 550110180VDS

Flange x Flange ANSI
3 in. (DN80) 550120130VDS
4 in. (DN100). 550120140VDS
6 in. (DN150). 550120160VDS
8 in. (DN200) 550120180VDS

Flange x Flange ISO
3 in. (DN80) 550140130VDS
4 in. (DN100). 550140140VDS
6 in. (DN150). 550140160VDS
8 in. (DN200) 550140180VDS

Note: *EMEA pressure switches, bar/psi water pressure gauges, NPT to ISO threaded trim adaptors for external connections, and VdS and LPCB required water column prevention drain components are provided.*

Separate DV-5A Valves without Trim
See Table A for flange drilling specifications.

Specify: Size (specify), DV-5A Automatic Water Control Valve, (specify) end connection, P/N (specify):

Groove x Groove
1 1/2 in. (DN40) 530010015
2 in. (DN50) 530010020
3 in. (DN80) 530010030
4 in. (DN100). 530010040
6 in. (DN150). 530010060
165,1 mm 530010066
8 in. (DN200) 530010080

Flange x Flange ANSI
3 in. (DN80) 530020030
4 in. (DN100). 530020040
6 in. (DN150). 530020060
8 in. (DN200) 530020080

Flange x Flange ISO
3 in. (DN80) 530040030
4 in. (DN100). 530040040
6 in. (DN150). 530040060
8 in. (DN200) 530040080

Note: *Valves are typically provided with flange drilling per ANSI B16.42 (Class 150) or ISO (7005-2 PN16).*

Upon request, valves can be provided with flange drilling per JIS B 2210 or AS 2129. In which case part numbers are not assigned.

DV-5A Valve Trim, EMEA
Specify: Size (specify), finish (specify), Wet Pilot Actuation Trim for DV-5A Automatic Water Control Valves used in Deluge Fire Protection System, P/N (specify):

Galvanized
1 1/2 in. (DN40) 540100120
2 in. (DN50) 540100120
3 in. (DN80) 540100130
4 in. (DN100). 540100140
6 in. (DN150). 540100160
8 in. (DN200) 540100180

Note: *Pressure switches, water pressure gauges, and BFV-300 Butterfly Valve are separately ordered. NPT to ISO threaded adaptors are provided for External Trim Connections (drains, pressure switches, water motor alarms, etc.).*

APAC

DV-5A Valves with Galvanized Trim
Specify: Size (specify), DV-5A Automatic Water Control Valve, (specify) end connection with assembled galvanized APAC, Wet Pilot Actuation Trim, P/N (specify):

Groove x Groove
1 1/2 in. (DN40) 550010115
2 in. (DN50) 550010120
3 in. (DN80) 550010130
4 in. (DN100). 550010140
6 in. (DN150). 550010160
165,1 mm 550010166
8 in. (DN200) 550010180

Flange x Flange ANSI
3 in. (DN80) 550020130
4 in. (DN100). 550020140
6 in. (DN150). 550020160
8 in. (DN200) 550020180

Flange x Flange ISO
3 in. (DN80) 550040130
4 in. (DN100). 550040140
6 in. (DN150). 550040160
8 in. (DN200) 550040180

Note: *Pressure switches and psi/kPa water pressure gauges are provided.*

Separate DV-5A Valves without Trim
See Table A for flange drilling specifications.

Specify: Size (specify), DV-5A Automatic Water Control Valve, (specify) end connection, P/N (specify):

Groove x Groove
1 1/2 in. (DN40) 530010015
2 in. (DN50) 530010020
3 in. (DN80) 530010030
4 in. (DN100). 530010040
6 in. (DN150). 530010060
165,1 mm 550010066
8 in. (DN200) 530010080

Flange x Flange ANSI
3 in. (DN80) 530020030
4 in. (DN100). 530020040
6 in. (DN150). 530020060
8 in. (DN200) 530020080

Flange x Flange ISO
3 in. (DN80) 530040030
4 in. (DN100). 530040040
6 in. (DN150). 530040060
8 in. (DN200) 530040080

Note: *Valves are typically provided with flange drilling per ANSI B16.42 (Class 150) or ISO (7005-2 PN16).*

Upon request, valves can be provided with flange drilling per JIS B 2210 or AS 2129. In which case part numbers are not assigned.

DV-5A Valve Trim, APAC
Specify: Size (specify), finish (specify), Wet Pilot Actuation Trim for DV-5A Automatic Water Control Valves used in Deluge Fire Protection System, P/N (specify):

Galvanized
1 1/2 in. (DN40) 540000120
2 in. (DN50) 540000120
3 in. (DN80) 540000130
4 in. (DN100). 540000140
6 in. (DN150). 540000160
8 in. (DN200) 540000180

Note: *Pressure switches are separately ordered.*

ALL REGIONS

DV-5A Valve Trim Accessories (for separately ordered valve trim)
Specify: (specify accessory description), P/N (specify):

Waterflow Pressure Alarm Switch, PS10-2 (America). 25710
Waterflow Pressure Alarm Switch (APAC) . . . . . 25710 or 100102
Waterflow Pressure Alarm Switch (EMEA) . . . . . 0260 or 100101
Model WMA-1 Water Motor Alarm (America/APAC) 526301001P
Model WMA-1 Water Motor Alarm (EMEA) 526301021R
Model MC-1 Manual Control Station. 522892001
Water Gauges with bar/psi 025500013
600 psi Water Gauge psi/kPa (service pressure over 300 psi) 923431004

DV-5A Valve Replacement Parts
Specify: (Description) for use with (specify size) DV-5A Automatic Water Control Valve, P/N (See Figure 1)

DV-5A Valve Trim Replacement Parts
Specify: (Description) for use with DV-5A Valve Trim, P/N (See Figure 6)

1467 Elmwood Avenue, Cranston, RI 02910 | Telephone +1-401-781-8220

© 2026 Johnson Controls. All rights reserved. All specifications and other information shown were current as of document revision date and are subject to change without notice.

NATIONAL FIRE PROTECTION ASSOCIATION and NFPA are registered trademarks of National Fire Protection Association;
TEFLON is a trademark of The Chemours Company FC, LLC

Johnson Controls

Worldwide Contacts | www.tyco-fire.com

DV-5A Appendix Poster Printing Instructions

General Description

The appendix found at the end of this document provides valve setting and testing/inspection procedures summarized from the Care and Maintenance section.

Some jurisdictions require a copy of the Summary Instructions appendix to be displayed in proximity to a DV-5A Automatic Control Valve riser supplying a fire protection system.

Reproduce as an individual poster by printing on appropriate media.

A form of protection is recommended to prevent damage which could render the poster illegible. Conditions to avoid include moisture infiltration, fading, mutilation, etc.. Protective measures may include lamination, placement within an impact- and water-resistant frame, etc.

The format shown in this document is landscape orientation on US Tabloid size, also known as ANSI B drawing format, both roughly comparable to ISO A3 size format.

To avoid potential cropping of content when printing to A3 format, select options such as print to fit or scale to fit. Depending on printer capability content will be slightly reduced but should remain readable.

See Print Format Dimensions Table for details.

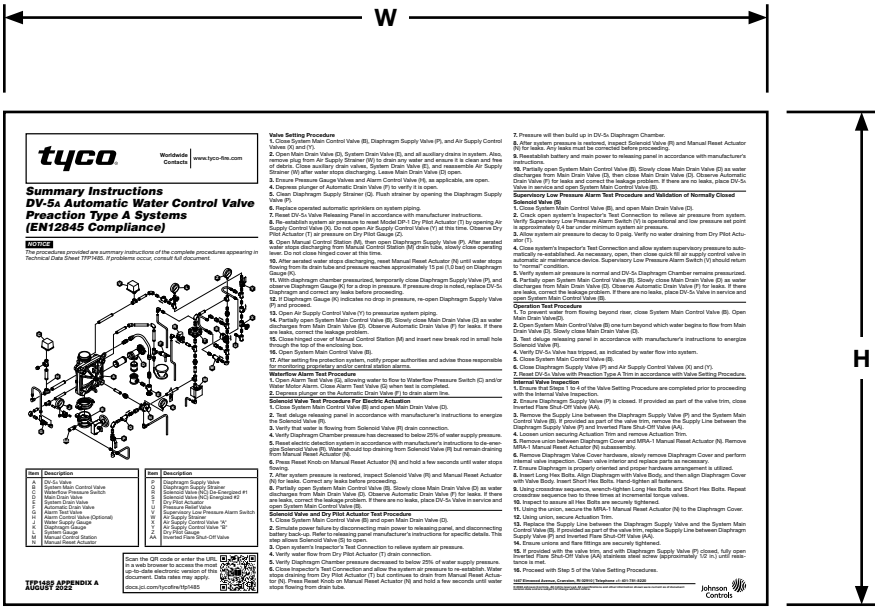

Format	Imperial in.		Metric mm	
	W	H	W	H
US Tabloid	17	11	—	—
ANSI B				
ISO A3	—	—	420	297

PRINT FORMAT DIMENSIONS

Worldwide Contacts | www.tyco-fire.com

Summary Instructions DV-5A Wet Pilot Actuated Deluge Valve

NOTICE

The procedures provided are summary instructions of the complete procedures appearing in Technical Data Sheet TFP1311. If problems occur, consult full document.

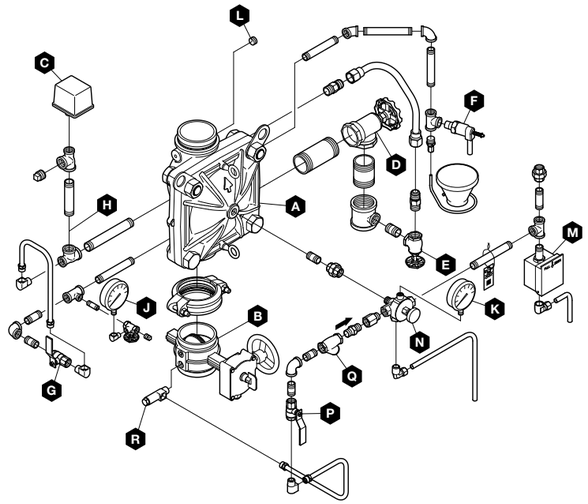

Item	Description
A	DV-5A Valve
B	System Main Control Valve
C	Waterflow Pressure Switch
D	Main Drain Valve
E	System Drain Valve
F	Automatic Drain Valve
G	Alarm Test Valve
H	Alarm Control Valve (Optional)

Item	Description
J	Water Supply Gauge
K	Diaphragm Gauge
L	System Gauge (Optional)
M	Manual Control Station
N	Manual Reset Actuator
P	Diaphragm Supply Valve
Q	Diaphragm Supply Strainer
R	Inverted Flare Shut-Off Valve

Valve Setting Procedure

1. Close system main control valve (B) and diaphragm supply valve (P).

2. Open the main drain valve (D), system drain valve (E), and all auxiliary drains in the system. Close the auxiliary drain valves and the system drain valve (E) after water stops discharging. Leave the main drain valve (D) open. Ensure that the pressure gauge valves and the alarm control valve (H) are open.

3. Depress plunger of automatic drain valve (F) to verify it is open.

4. Clean diaphragm supply strainer (Q). Flush strainer by opening the diaphragm supply valve (P).

5. Replace operated pilot sprinklers and/or reset remote manual control stations.

6. Open manual control station (M) and diaphragm supply valve (P). After water stops discharging, slowly close the operating lever. Do not close the hinged cover at this time.

7. After water stops discharging, reset the manual reset actuator (N) until water stops flowing from its drain tube and pressure reaches approximately 15 psi (1,0 bar) on diaphragm gauge (K).

8. Crack open inspector's test connection and any other vent valves. After air has stopped discharging, close vent valves and inspector's test connection.

9. With diaphragm chamber pressurized, temporarily close diaphragm supply valve (P) and observe diaphragm gauge (K) for a drop in pressure. If a pressure drop is noted, replace DV-5A diaphragm and correct any leaks before proceeding.

10. If diaphragm gauge (K) indicates no drop in pressure, re-open the diaphragm supply valve (P) and proceed.

11. Partially open system main control valve (B). Slowly close main drain valve (D) as water discharges from main drain valve (D). Observe automatic drain valve (F) for leaks. If there are leaks, correct the leakage problem.

12. Close hinged cover of manual control station (M). Insert a new break rod in the small hole through the top of the enclosing box.

13. Open system main control valve (B).

14. After setting fire protection system, notify proper authorities and advise those responsible for monitoring proprietary and/or central station alarms.

Drop in Water Supply Pressure Below Normal Range

1. Note water supply pressure by the diaphragm gauge (K) and determine if the pressure is within normally expected range.

2. If below normal range, correct any leakage from diaphragm chamber prior to resetting the system.

3. When water supply pressure is restored, reset DV-5A valve in accordance with the Valve Setting Procedure.

Waterflow Alarm Test Procedure

1. Open alarm test valve (G), allowing water to flow to waterflow pressure switch (C) and/or water motor alarm. Close the alarm test valve (G) when test is completed.

2. Depress plunger on automatic drain valve (F) to drain alarm line.

Wet Pilot Actuation Operation Test Procedure

1. Close system main control valve (B).

2. Open main drain valve (D).

3. Open system main control valve (B) one turn beyond position at which water just begins to flow from main drain valve (D).

4. Slowly close main drain valve (D).

5. Open inspector's test connection.

6. Verify DV-5A valve has tripped, as indicated by the flow of water into system.

7. Close system main control valve (B).

8. Close diaphragm supply valve (P).

9. Reset DV-5A valve in accordance with Valve Setting Procedure.

Internal Valve Inspection

1. Ensure that Steps 1 to 4 of the Valve Setting Procedure are completed prior to proceeding with the Internal Valve Inspection.

2. Ensure diaphragm supply valve (P) is closed. If provided as part of the valve trim, close Inverted flare shut-off valve (R).

3. Remove the supply line between the diaphragm supply valve (P) and the system main control valve (B). If provided as part of the valve trim, remove the supply line between the diaphragm supply valve (P) and inverted flare shut-off valve (R).

4. Loosen union securing actuation trim and remove actuation trim.

5. Remove union between diaphragm cover and MRA-1 manual reset actuator (N). Remove MRA-1 manual reset actuator (N) subassembly.

6. Remove diaphragm valve cover hardware, slowly remove diaphragm cover and perform internal valve inspection. Clean valve interior and replace parts as necessary.

7. Ensure diaphragm is properly oriented and proper hardware arrangement is utilized.

8. Insert long hex bolts. Align diaphragm with valve body, and then align diaphragm cover with valve body. Insert short hex bolts. Hand-tighten all fasteners.

9. Using crossdraw sequence, wrench-tighten long hex bolts and short hex bolts. Repeat crossdraw sequence two to three times at incremental torque valves.

10. Inspect to assure all hex bolts are securely tightened.

11. Using the union, secure the MRA-1 manual reset actuator (N) to the diaphragm cover.

12. Using union, secure actuation trim.

13. Replace the supply line between the diaphragm supply valve and the system main control valve (B). If provided as part of the valve trim, replace supply line between diaphragm supply valve (P) and inverted flare shut-off valve (R).

14. Ensure unions and flare fittings are securely tightened.

15. If provided with the valve trim, and with diaphragm supply valve (P) closed, fully open inverted flare shut-off valve (R) stainless steel screw (approximately 1/2 in.) until resistance is met.

16. Proceed with Step 5 of the Valve Setting Procedures.

Scan the QR code or enter the URL in a web browser to access the most up-to-date electronic version of this document. Data rates may apply.

docs.jci.com/tycofire/1311

TFP1311 APPENDIX A
SEPTEMBER 2026

1467 Elmwood Avenue, Cranston, RI 02910 | Telephone +1-401-781-8220

© 2026 Johnson Controls. All rights reserved. All specifications and other information shown were current as of document revision date and are subject to change without notice.