Worldwide Contacts | www.tyco-fire.com

DV-5A Red-E Cabinet
Integrated Deluge Fire Protection Package

IMPORTANT
Refer to Technical Data Sheet TFP2300 for warnings pertaining to regulatory and health information.

Scan the QR code or enter the URL in a web browser to access the most up-to-date electronic version of this document. Data rates may apply.

docs.jci.com/tycofire/tfp1301

General Description

The TYCO DV-5A Red-E Cabinet is a pre-assembled fire protection valve package enclosed within a free-standing cabinet designed to occupy minimal floor space and to provide an aesthetically pleasing enclosure for a fire protection valve riser. The entire package is pre-wired and the water inlet and outlets to the valve riser are grooved to provide minimal installation time. The valve package includes the system (manual) shut-off control valve, automatic water control valve, and waterflow/supervisory switches. When dry pilot actuation is utilized, an optional built-in air compressor with associated controls provides an automatic air supply for the dry pilot lines.

Integral to the DV-5A Red-E Cabinet is a control panel and back-up batteries for providing electrical alarm, supervisory, and trouble functions. All switches within the cabinet are pre-wired to the control panel, making the electrical connections for power, detection circuits (as applicable), and alarms the only remaining connections to complete the system.

In addition to the control panel being integral to the DV-5A Red-E Cabinet, windows have been provided in the door for viewing the releasing panel functions and essential system pressure gauges. A lock for the control panel access door is standard, and a lock for the cabinet door is optional.

Features and benefits are as follows:

- Aesthetically pleasing appearance
- Professionally assembled
- Internally wired
- Custom manufactured
- All gauges and panel display are externally visible
- Industrial grade rollers (4) are standard at bottom of cabinet
- Fork lift compatible
- Two-door cabinet design for ease of maintenance
- Internal, gauge panel, and control panel lighting
- Optional seismic kit

The DV-5A Red-E Cabinet is designed to readily incorporate 1-1/2 in. to 8 in. (DN40 to DN200) valve risers for the following types of deluge systems:

- Wet pilot actuation
- Dry pilot actuation
- Electric actuation
- Remote-resetting
- Remote-resetting, Pressure-reducing*

*3 in. to 8 in. (DN80 to DN200)

NOTICE

The TYCO DV-5A Red-E Cabinets described herein must be installed and maintained in compliance with this document and with the applicable standards of the NATIONAL FIRE PROTECTION ASSOCIATION (NFPA), in addition to the standards of any authorities having jurisdiction. Failure to do so may impair the performance of these devices.



The owner is responsible for maintaining their fire protection system and devices in proper operating condition. Contact the installing contractor or product manufacturer with any questions.

Technical Data

Approvals
UL and C-UL Listed, see Table B

Applicable System Types:

- Wet pilot actuation
- Dry pilot actuation
- Electric actuation
- Remote-resetting
- Remote-resetting, pressure-reducing

FM Approved, see Tables B and C
CSFM Listed

Applicable System Types:

- Wet pilot actuation
- Dry pilot actuation
- Electric actuation

System Types
The technical data sheets referenced in Table A provide complete details for each system type arrangement.

Working Pressure Range
DV-5A Valve: 20 to 300 psi (1,4 to 20,7 bar)

Valve Trim: Refer to individual trim technical data sheets for rated trim pressures as shown in Table A

DIM	Description	Nominal Riser Size Nominal Dimension in. (mm)[1]					
		1 1/2 (DN40)	**2 (DN50)**	**3 (DN80)**	**4 (DN100)**	**6 (DN150)**	**8 (DN200)**
A	System Discharge	1 1/2 (DN40)	2 (DN50)	3 (DN80)	4 (DN100)	6 (DN150)	8 (DN200)
B	Supply Header	4 (DN100)				8 (DN200)	
C	Drain Header	2 (DN50)					
D	Header Left	17.0 (432,0)				24.75 (628,7)	
E	Header Right	16.0 (406,0)				26.75 (679,5)	
F	Riser Height	68.26 (1733,8)	68.4 (1737,36)	68.44 (1738,4)	67.34 (1738,4)	67.9 (1724,7)	
G	Connection Offset	9.42 (239,3)				9.34 (237,2)	
H	Connection Offset	5.0 (127,0)				8.6 (218,4)	
J	Connection Offset	4.88 (124,0)				8.5 (215,9)	
K	Connection Offset	6.88 (174,8)				9.5 (241,3)	
L	Connection Offset	5.63 (143,0)				6.57 (166,9)	
M	Connection Offset	19.5 (495,3)				25.15 (638,8)	
N	Cabinet Height	73.25 (1860,6)				73.5 (1866,9)	
P	Cabinet Width	38.15 (969,0)				48.15 (1223,0)	
R	Cabinet Depth	23.73 (602,7)				29.64 (752,9)	

Notes
1. All pipe connections are grooved
2. Supply and drain header connections made internal to cabinet

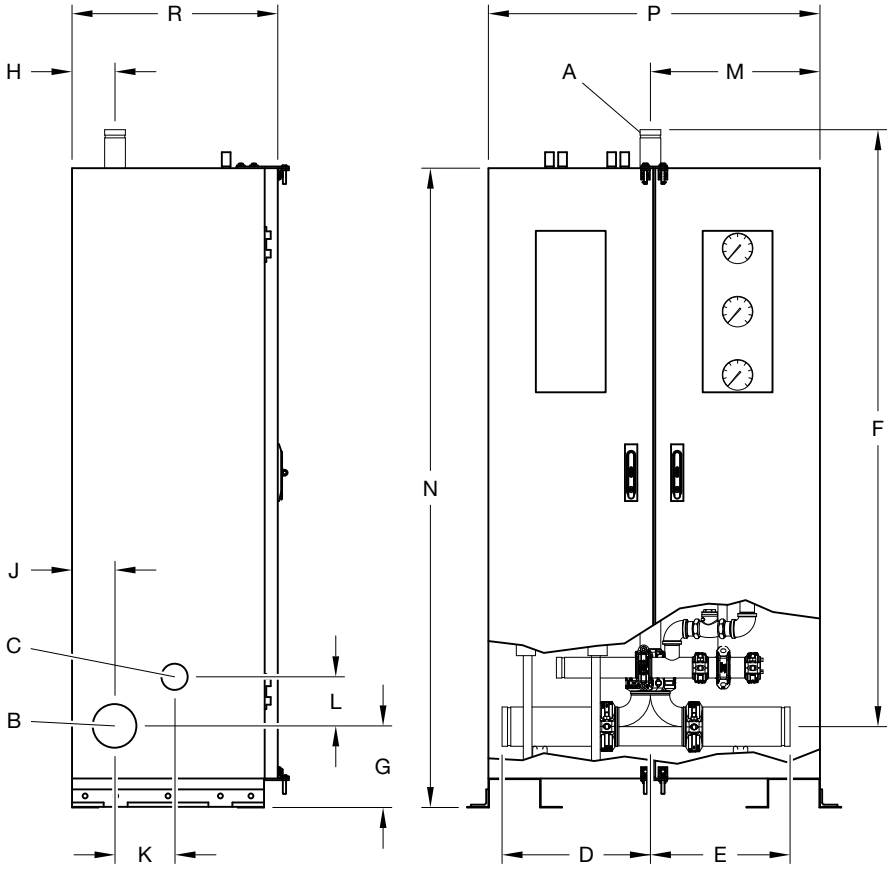

FIGURE 1
INSTALLATION DIMENSIONS AND REFERENCE POINTS

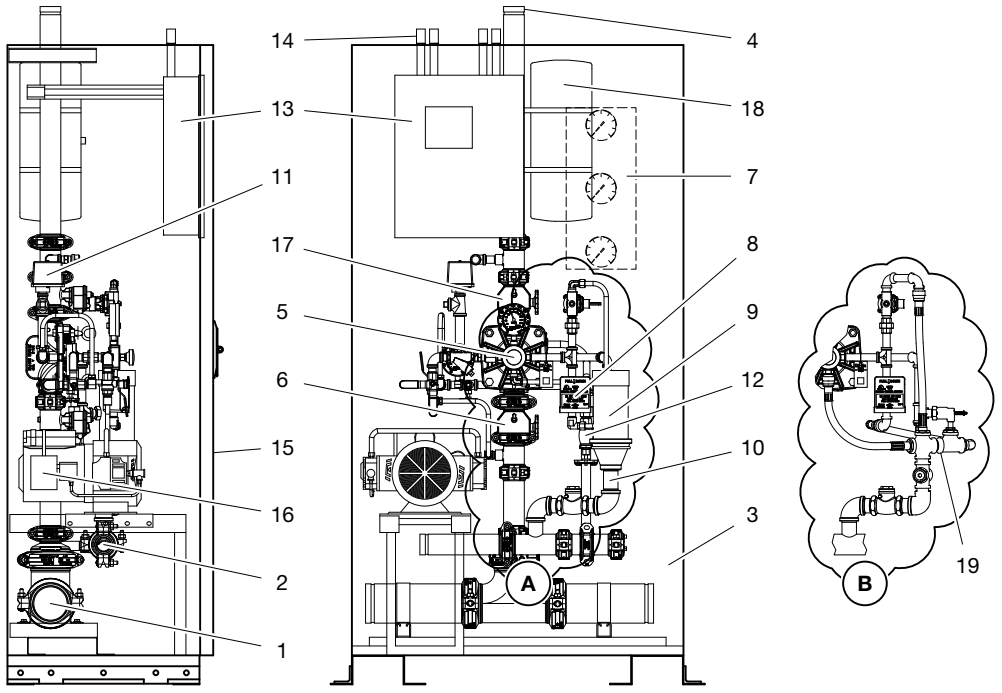

1 - Supply Header
2 - Drain Header
3 - Supply and Drain Header Connections on Left or Right Side
4 - System Discharge Connection
5 - DV-5A Valve with Deluge Trim
6 - Manual System Shut-Off Valve
7 - System Pressure Gauges
8 - Manual Control Station
9 - Splash-Proof Drain Cup[A]
10 - Drain Header Integrated Trim Drain Connection
11 - Waterflow Pressure Alarm Switch
12 - Main Drain Valve
13 - Releasing Panel
14 - Electrical Conduit Connections
15 - Main Compartment Access Doors with Lock
16 - System Air Compressor for Dry Pilot Actuation Configurations
17 - Manual System Shut Off Valve
18 - Air Tank for Dry Pilot Actuation Configurations
19 - Fixed Drain with Sight Flow Glass[B]

Notes:
A. Drain cup Americas region only
B. Fixed drain APAC region only

FIGURE 2
TYPICAL ASSEMBLY ARRANGEMENT
(2 IN. DELUGE SYSTEM WITH ELECTRIC ACTUATION SHOWN)

Construction
The Red-E Cabinet is constructed of a minimum thickness of 14 gauge steel, and is free standing. The standard paint finish is bright red and black. The front doors of the enclosure are fully hinged and removable and open nearly to the cabinet floor level, allowing easy access to the couplings when connecting the water supply and drain.

The compressor is stored near the bottom of the cabinet on a pull out drawer for access through the double doors. Pre-drilled holes on tabs along the base provide an anchor point for the cabinet to be secured to the floor when required. Industrial grade rollers at the bottom of the cabinet are standard.

Internal controls that provide functions to reset a system after operation, for example, alarm test valve, main drain valve, are individually tagged for easy identification. All prefabricated piping is Schedule 40 steel.

Red-E Cabinets available in the Americas region feature a splash-proof drain cup, see arrangement A in Figure 2. Red-E Cabinets available in the APAC region feature a fixed drain piping assembly, see arrangement B in Figure 2. Both allow observation of drain discharge during flow testing while preventing water from splashing into the cabinet.

The splash-proof drain cup assembly combines a standard drip funnel and clear observation tube featuring a fail-safe overflow which allows water to be diverted in the event the drain is blocked. The drain cup assembly is penetrated by tubing from various trim drain points such as actuation devices as applicable.

The fixed drain arrangement connects trim drain points such as actuation devices by pipe, tubing and fittings through a sight flow glass.

Each drain arrangement is hard piped through a swing check valve to the main drain header, eliminating the need to run a separate drain line. The cabinet floor features a plugged drain opening to allow accumulated water to be removed if necessary.

For dry pilot trim arrangements, the air supply connection for cabinets without compressors (that utilizes AMD-1) are terminated at a common height across all model sizes allowing the connection of groups of cabinets easier. This allows a single tank mounted compressor sized to meet the requirements of the largest system in the group to supply all the cabinets in the group, or alternatively, connect to the factory air supply. The air supply line contains a tee and plug which is used to connect a hydraulic test pump that pressurizes the sprinkler system above the butterfly valve for hydraulic testing of the system in accordance with NFPA 13.

Table A provides a list of riser components and a cross reference to individual technical data sheets, as well as individual component laboratory approval information.

Figure 1 provides dimensional information for Red-E Cabinets, and Figure 2 illustrates the typical assembly arrangement.

Description		Model	TDS*	UL	C-UL/ULC	FM Global
Automatic Water Control Valve and Deluge Trim		DV-5A				
Wet Pilot Actuation			TFP1311	X	X	X
Dry Pilot Actuation			TFP1316	X	X	X
Electric Actuation			TFP1321	X	X	X
Remote-Resetting			TFP1325	X	X	X
Remote-Resetting, Pressure-Reducing			TFP1326	X	X	X
System Shut-Off Valve, 1 1/2 to 2 in. (DN40 to DN50)		POWERBALL	N/A	X[4]	X[4]	X[4]
System Shut-Off Valve, 3 to 8 in. (DN75 to DN200)		BFV-300	TFP1511	X	X	X
Pressure Alarm Switch	Tyco, APAC/EMEA	TPS10X2	TFP2110	X[5]	X[5]	X[5]
	POTTER, Americas	PS10-2A	N/A			
Low Pressure Alarm Switch	Tyco, APAC/EMEA	TPS40X2	TFP2110	X[5]	X[5]	X[5]
	POTTER, Americas	PS40-2A	N/A			
Control Panel, Potter Electric Signal[1]		PFC-4410G3	N/A	X[5]	X[5]	X[5]
Air Maintenance Device[2], Regulator Type		AMD-1	TFP1221	X	X	X
Air Maintenance Device[3], Switch Type		AMD-2	TFP1231	X	X	X
Nitrogen Maintenance Device3		AMD-3	TFP1241	X	X	X

Notes
1. The Model PFC-4410G3 is standard. The Red-E Cabinet may be ordered without an integral control panel. Red-E Cabinets featuring remote-resetting and remote-resetting, pressure-reducing system types are not offered with a control panel.
2. The Model AMD-1 Air Maintenance Device, in addition to an auxiliary air tank, is utilized as standard equipment for dry pilot actuation having a compressor that delivers air at 5.5 ft^3/min (0.16 m^3/min) or higher. In the case of dry pilot actuation, the automatic air supply is utilized for the air pressure required for the dry pilot lines. An OL12516AC (1/6 HP) air compressor is provided as standard for maintaining the air pressure in the auxiliary air tank.
3. The Model AMD-2 Air Maintenance Device and Model AMD-3 Nitrogen Maintenance Device, as well as the Model AMD-1 Air Maintenance Device, are offered as options when the Red-E Cabinet for Dry Pilot Actuation is ordered without a built-in automatic air supply (for example, air compressor).
4. Approvals under the name of LANSDALE VALVE & MANUFACTURING.
5. Approvals under the name of POTTER.

* TDS - Technical Data Sheet

TABLE A
PRINCIPAL COMPONENTS
TECHNICAL DATA SHEETS AND LABORATORY LISTINGS AND APPROVALS

Model Number	Horsepower Rating (hp)	Voltage[1]	Theoretical fill times based on system size and target pressure	
			System Volume @20 psi (1.38 bar) in 30 mins gal (L)	System Volume @40 psi (2.76 bar) in 30 mins gal (L)
OLR12016AC	1/6	115/208-230 VAC 60 Hz	240 (909)	120 (454)
OLR12016AC-50[2]	1/6	220-240 VAC 50 Hz	192 (727)	96 (362)

Notes
1. Dry Pilot Actuation is provided as standard with a Model OLR12016AC Air Compressor.
2. 50 Hz compressor available on request

TABLE B
AIR COMPRESSOR SELECTION CRITERIA
FOR DELUGE DRY SYSTEM ARRANGEMENTS
BASED ON SYSTEM TYPE AND VOLUME

Design Considerations

The open nozzles and/or sprinklers, fire detection devices, manual pull stations, and signaling devices that are to be utilized with the Red-E Cabinet must be UL Listed, ULC Listed, C-UL Listed, or FM Approved, as applicable. With reference to Figure 3, the system designer must consider and make preparations for use of a Red-E Cabinet as follows:

- Adequate floor space to facilitate opening of the cabinet doors
- Minimum ambient temperature of 40°F (4°C)
- Installation of a suitably sized water supply to the water supply header (Port B, Figure 1)
- Installation of system piping (Port A, Figure 1) including open nozzles and/or sprinklers from the Red-E cabinet outlet
- Installation of drains from main drain header (Port C, Figure 1)
- Installation of the detection system components and alarms
- Power supply to Red-E Cabinet
- Separate power supply to the air compressor (dry pilot actuation)

Installation

The TYCO DV-5A Red-E Cabinet is to be installed following the directions given in the Red-E Cabinet Installer's Manual provided with the Red-E Cabinet. Instructions pertain to the following items:

- Placing the cabinet
- Connecting the system piping
- Electrical connections
- System start-up

Care and Maintenance

Inspection, testing, and maintenance must be performed in accordance with the requirements of the NFPA, and any impairment must be immediately corrected.

Before closing a fire protection system main control valve for maintenance work on the fire protection system that it controls, permission to shut down the affected fire protection systems must first be obtained from the proper authorities and all personnel who may be affected by this decision must be notified.

The TYCO Red-E Cabinet does not require any regularly scheduled inspection or maintenance. The riser components enclosed within the Red-E Cabinet, however, must be maintained in accordance with their applicable technical data sheet as shown in Table A. In addition, the control panel and automatic air supply (as applicable) components must be maintained in accordance with their applicable instructions provided with the Red-E Cabinet.

The owner is responsible for the inspection, testing, and maintenance of their fire protection system and devices in compliance with this document, as well as with the applicable standards of any authorities having jurisdiction. Contact the installing contractor or product manufacturer with any questions.

Automatic sprinkler systems are recommended to be inspected, tested, and maintained by a qualified Inspection Service in accordance with local requirements and/or national codes.

Red-E Cabinet Technical Support

Technical support for the Red-E Cabinet is available by calling 888-572-4638 during regular business hours of 8:30-12:00 and 1:00-5:00 Eastern Time Monday through Friday.

Contact Red-E Cabinet Technical Support for special request cabinet configuration or electrical connection/control panel programming inquiries.

An answering service will take messages outside of the regular business hours.

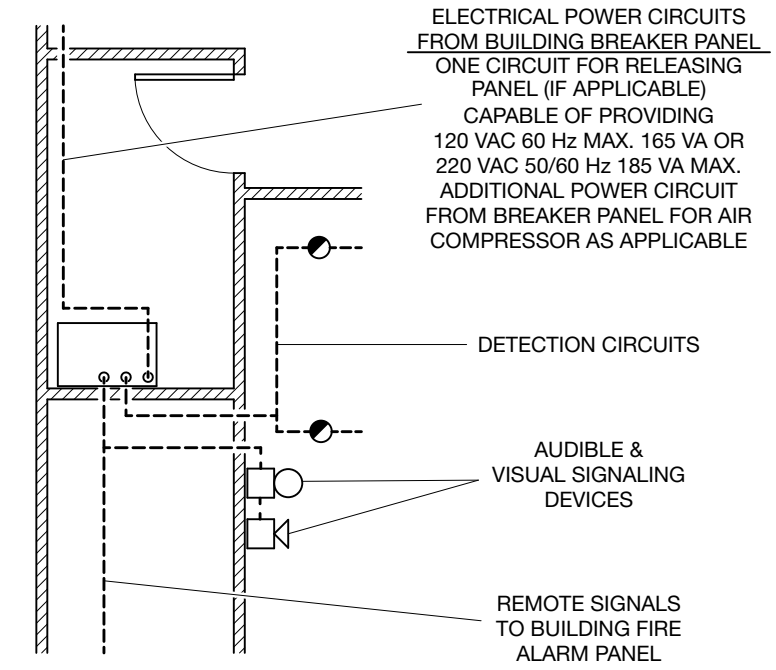

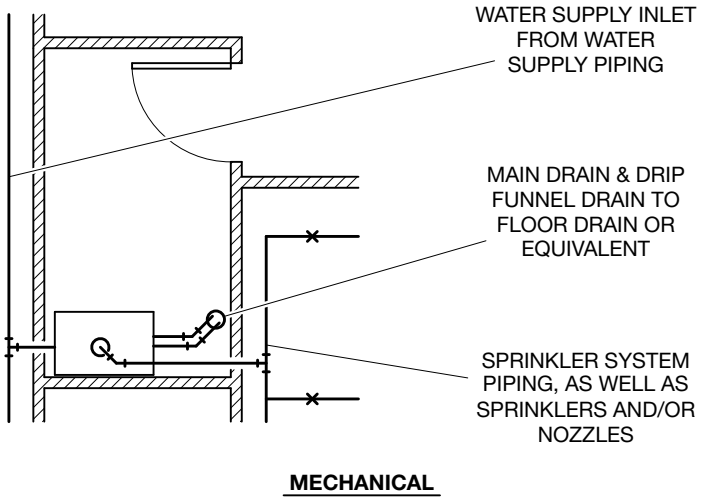

FIGURE 3
SYSTEM DESIGN CONSIDERATIONS

P/N 53XXXXXXXX

Solenoid Pressure Rating	
0	300 psi solenoid (standard)

Size in.	
1	1 1/2
2	2
3	3
4	4
6	6 (168,3 mm)
8	8

System Type	
01	Deluge Wet Pilot Actuation
02	Deluge Dry Pilot Actuation
03	Deluge Electric Actuation
04	Deluge Remote-Resetting
05	Deluge Remote-Resetting Pressure-Reducing[1]

Air Maintenance Device[2]	
0	None
1	AMD-1
2	AMD-2
3	AMD-3

Trim Type[3]	
1	NPT Galvanized

Control Panel	
0	None
A	Included

Compressor[2,4]	
0	None
1	1/6 hp 120 Gal

Notes
1. Deluge Remote-Resetting, Pressure-Reducing available in sizes 3 to 8 in. (DN80 to DN200).
2. Air Maintenance Device does not apply (select 0 - None) when the compressor is selected.
3. Black trim types are available only on request. Contact Red-E Cabinet Technical Support for information.
4. A 50 Hz compressor model is available on request.

TABLE C
DV-5A RED-E CABINET DELUGE SYSTEMS
PART NUMBER SELECTION

Limited Warranty

For warranty terms and conditions, visit www.tyco-fire.com.

Ordering Procedure

The following Part Numbers (P/N) are provided for standard cabinets with integral control panel, built-in automatic air supply, for example, air compressor and controls for dry pilot actuation, and galvanized pipe, nipples, and fittings.

DV-5A Red-E Cabinet with Deluge System
Specify: Size (specify) DV-5A Red-E Cabinet with (specify actuation) system trim, P/N (specify per Table D)

Note: *Dry pilot actuation is provided standard with a OL12516AC (1/6 HP) Air Compressor and Auxiliary Air Tank complete with one Model AMD-1 Air Maintenance Device.*

Special Order
The DV-5A Red-E Cabinet can be provided as follows as part of a special request cabinet configuration:

- Without the control panel
- Without built-in automatic air supply, for example, air compressor and controls for dry pilot actuation
- With an optional air/nitrogen maintenance device when ordered without built-in automatic air supply for dry pilot actuation
- With trim black pipe, nipples, and fittings, as may be desired for foam systems
- With 50 Hz air compressors. see Table B
- With seismic kit. Kit must be ordered separately:

Valve Size	Part No.
1 1/2 to 4 in.	530400001
4 to 8 in.	530800001

Options
The DV-5A Red-E Cabinet can be provided with the following options:

- With sight flow gage (provides a visual indication of flow through the main drain)
- With extra capacity batteries (12V up to 18Ah) for longer battery time and/or systems with heavy power requirements, for example, numerous audible signaling devices
- With Class “A” initiating appliance circuits
- This option permits the connection of Class “A” style wiring to the initiating zones
- With Class “A” indicating appliance circuits
- This option permits the connection of Class “A” style wiring to the indicating zones
- With auxiliary relay modules to provide extra dry contacts when required; up to an 8 ARM-44 module per cabinet can be added
- With RA-4410 RC Remote Annunciator

Contact Red-E Cabinet Technical Support for information about special request cabinet configurations.

1467 Elmwood Avenue, Cranston, RI 02910 | Telephone +1-401-781-8220

© 2025 Johnson Controls. All rights reserved. All specifications and other information shown were current as of document revision date and are subject to change without notice.

NATIONAL FIRE PROTECTION ASSOCIATION and NFPA are registered trademarks of National Fire Protection Association;
LANSDALE VALVE & MANUFACTURING and POWERBALL are trademarks of Lansdale Valve & Manufacturing Corp.; POTTER is a trademark of Potter Electric Signal Company, LLC

Johnson Controls