Worldwide Contacts | www.tyco-fire.com

Model DPV-1 Dry Pipe Valve
Model ACC-1 Dry Pipe Valve Accelerator
European Conformity Valve Trim

IMPORTANT
Refer to Technical Data Sheet TFP2300 for warnings pertaining to regulatory and health information.

Scan the QR code or enter the URL in a web browser to access the most up-to-date electronic version of this document. Data rates may apply.

docs.jci.com/tycofire/tfp1090

General Description

Dry Pipe Valve
The TYCO Model DPV-1 Dry Pipe Valve is a differential valve for automatically controlling the flow of water into dry pipe fire protection sprinkler systems upon operation of one or more automatic sprinklers. The DPV-1 valve also provides for actuation of fire alarms upon system operation. The valve is available in four sizes: DN65, DN80, DN100, and DN150.

Features:
- External reset
- 16 bar pressure rating
- Unique offset single clapper design enabling a simple compact valve to minimize installation labor
- Ductile iron construction to ensure a lightweight valve to minimize shipping cost
- A variety of inlet and outlet connections
- Simple reset procedure through the elimination of priming water

Dry pipe sprinkler systems are used in unheated warehouses, parking garages, store windows, attic spaces, loading docks, and other areas exposed to freezing temperatures, where water filled pipe cannot be utilized. When set for service, the dry pipe sprinkler system is pressurized with air (or nitrogen). The loss of pressure through an operated automatic sprinkler in response to heat from a fire permits the DPV-1 valve to open and allow a flow of water into the sprinkler system piping. Table B establishes the minimum required system air pressure that includes a safety factor to help prevent false operations that occur due to water supply fluctuations.

Accelerator
The optional TYCO Model ACC-1 Dry Pipe Valve Accelerator is a quick opening device that is intended to reduce the time for valve operation following the operation of one or more automatic sprinklers. The Model ACC-1 Accelerator automatically adjusts to both small and slow changes in system pressure, but trips when there is a rapid and steady drop in pressure (as in the case of a sprinkler operation). Upon tripping, the accelerator transmits system air pressure to the intermediate chamber of the DPV-1 valve. This neutralizes the differential pressure holding the DPV-1 valve closed and permits it to open.

The Model ACC-1 Dry Pipe Valve Accelerator has a unique, positive action, internal anti-flood device and a ball float which combine to prevent water and water borne debris from entering the more sensitive operating areas of the accelerator. The anti-flood device seals and latches immediately upon operation of the ACC-1 accelerator without waiting for a pressure build-up in the intermediate chamber of the dry pipe valve. The latching feature keeps the anti-flood device sealed, even while the system is being drained. The ball float seals the pilot chamber inlet port if there is an inadvertent trip of the dry pipe valve, due for example, to an air compressor failure combined with a slow loss in system air pressure due to a leak.



Nominal Valve Size	Alarm Test Valve	With Accelerator	Figure
DN65	Three Way		7
		✓	13
	Standard		10
		✓	16
DN80	Three Way		7
		✓	13
	Standard		10
		✓	16
DN100	Three Way		8
		✓	14
	Standard		11
		✓	17
DN150	Three Way		12
		✓	15
	Standard		10
		✓	18

TABLE A
EUROPEAN CONFORMITY VALVE TRIM CONFIGURATIONS

NOTICE
The Model DPV-1 Dry Pipe Valves and Model ACC-1 Dry Pipe Valve Accelerators described herein must be installed and maintained in compliance with this document and the standards recognized by the Approval agency, in addition to any other authorities having jurisdiction. Failure to do so may impair the performance of these devices.

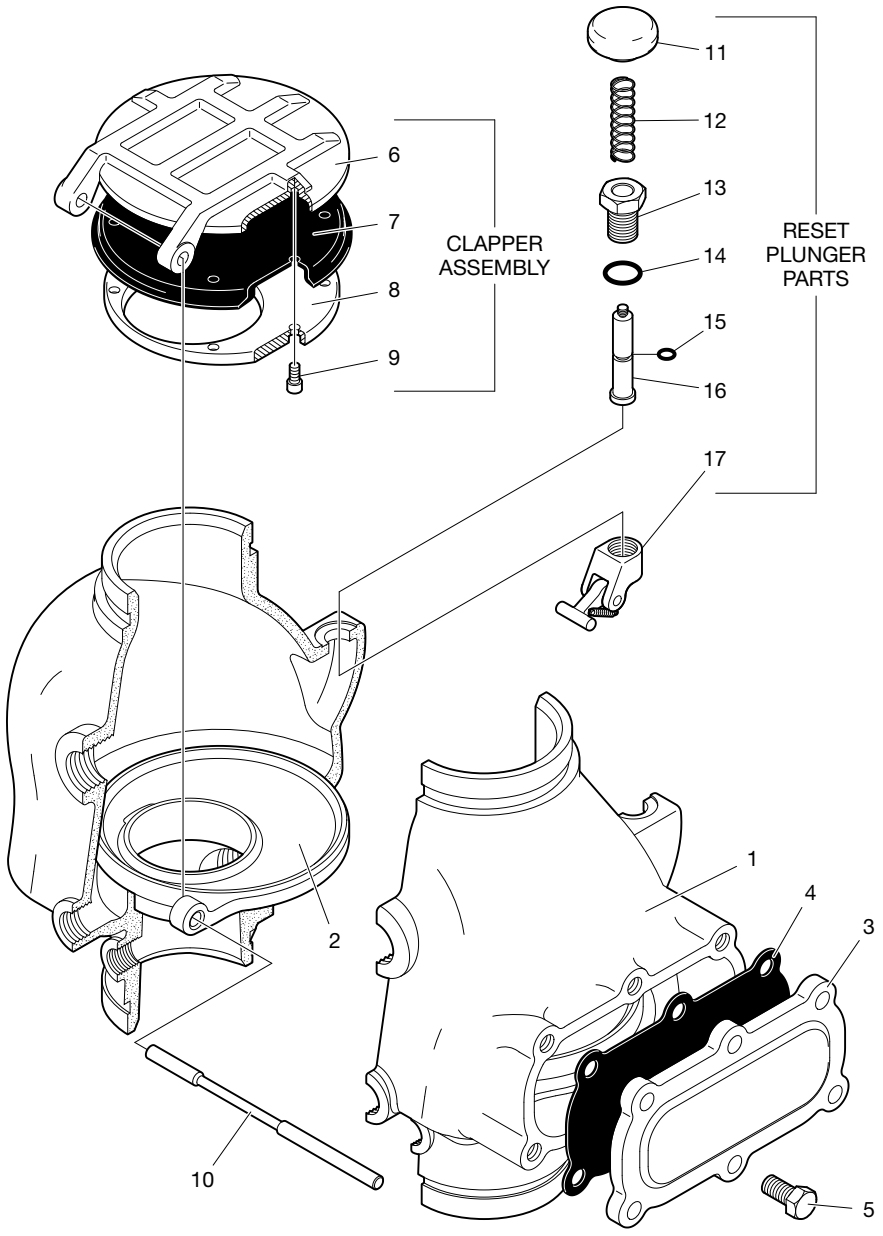

NO.	DESCRIPTION	QTY.	REF.
1	Valve Body	1	NR[1]
2	Air and Water Seat	1	NR[1]
3	Handhole Cover	1	NR[1]
4	Handhole Cover Gasket	1	(b)
5	1/2-13 UNC x 1" Hex Head Cap Screw: DN65, DN80 Valves	5	CH[2]
	DN100 Valve	6	CH[2]
6	Clapper	1	(a)
7	Clapper Facing	1	(a) or (b)
8	Clapper Facing Retaining Plate	1	(a)
9	DN65, DN80 Valves: 1/4" x 3/8" Long #10-32 Shoulder Screw. DN100 Valve: 1/4-20 UNC x 1/2" Socket Head Cap Screw	5 7	(a) (a)
10	Clapper Hinge Pin	1	(a)
11	Reset Knob	1	(c) or (d)
12	Reset Spring	1	(c)
13	Reset Bushing	1	(c)
14	Reset Bushing O-Ring	1	(b), (c) or (e)
15	Reset Plunger O-Ring[3]	1	(b) or (c)
16	Reset Plunger	1	(c)
17	Reset Latch Subassembly	1	(c)

NOTES:

1. NR = Not Replaceable
2. CH = Common Hardware
3. Dow Corning FS3452 Flourosilicone Grease factory-applied to Reset Plunger O-Ring; Do not remove grease when reassembling valve.

NO.	DESCRIPTION	P/N
(a)	Clapper Assembly, Includes Items 6–10: DN65, DN80 Valves	92-312-2-203
	DN100 Valve	92-312-2-403
(b)	Repair Parts Kit, Includes Items 4, 7, 14, 15: DN65, DN80 Valves	92-312-1-204
	DN100 Valve	92-312-1-404
(c)	Reset Plunger Parts Kit, Includes Items 11–17	92-312-1-405
(d)	Reset Knob, Item 11	92-312-1-406
(e)	Reset Plunger O-Ring, Item 15	92-312-1-407

FIGURE 1A
MODEL DPV-1 DRY PIPE VALVE
DN65, DN80, AND DN100 ASSEMBLY

NO.	DESCRIPTION	QTY.	REF.
1	Valve Body	1	NR[1]
2	Air and Water Seat	1	NR[1]
3	Water SeaL O-Ring	1	NR[1]
4	Air SeaL O-Ring	1	NR[1]

NO.	DESCRIPTION	QTY.	REF.
5	3/8-16 UNC x 1" Socket Head Cap Screw	8	NR[1]
6	Handhole Cover	1	NR[1]

NO.	DESCRIPTION	QTY.	REF.
7	Handhole Cover Gasket	1	(b)
8	5/8-11 UNC x 1" Hex Head Cap Screw	6	CH[2]
9	Clapper	1	(a)
10	Clapper Facing	1	(a) or (b)
11	Clapper Facing Retaining Plate	1	(a)
12	1/4-20 UNC x 1/2" Socket Head Cap Screw	9	(a)
13	Clapper Hinge Pin	1	(a)
14	Reset Knob	1	(c) or (d)
15	Reset Spring	1	(c)
16	Reset Bushing	1	(c)
17	Reset Bushing O-Ring	1	(b), (c) or (e)
18	Reset Plunger O-Ring[3]	1	(b) or (c)
19	Reset Plunger	1	(c)
20	Reset Latch Subassembly	1	(c)

NOTES:

1. NR = Not Replaceable
2. CH = Common Hardware
3. Dow Corning FS3452 Flourosilicone Grease factory-applied to Reset Plunger O-Ring; Do not remove grease when reassembling valve.

NO.	DESCRIPTION	P/N
(a)	Clapper Assembly, Includes Items 9–13	92-312-2-603
(b)	Repair Parts Kit, Includes Items 7, 10, 17, 18	92-312-1-604
(c)	Reset Plunger Parts Kit, Includes Items 14–20	92-312-1-405
(d)	Reset Knob, Item 14.	92-312-1-406
(e)	Reset Plunger O-Ring, Item 18	92-312-1-407

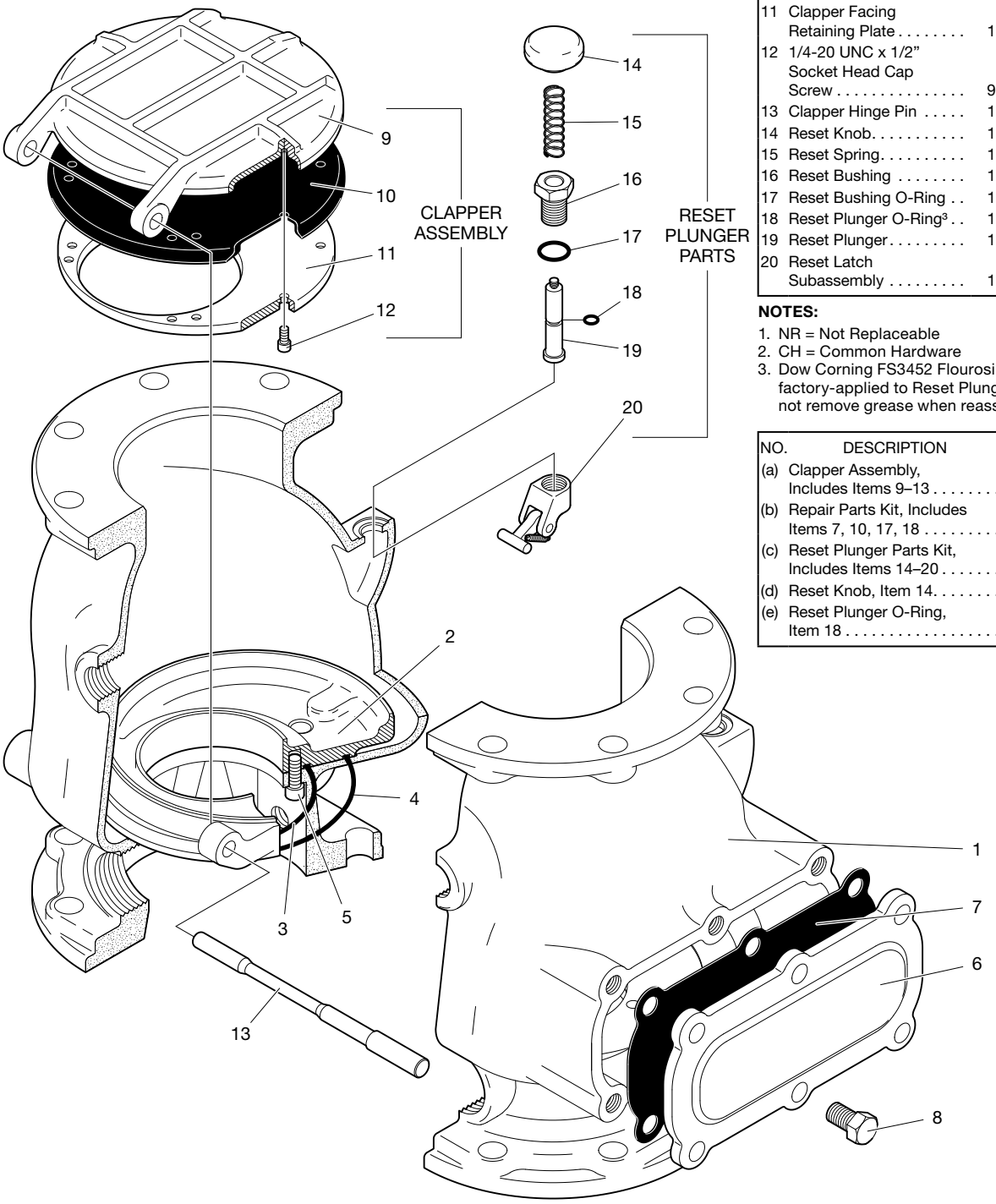

FIGURE 1B
MODEL DPV-1 DRY PIPE VALVE
DN150 ASSEMBLY

The owner is responsible for maintaining their fire protection system and devices in proper operating condition. The installing contractor or manufacturer should be contacted with any questions.

Technical Data

Approvals
Model DPV-1 Dry Pipe Valves with or without the TYCO Model ACC-1 Dry Pipe Valve Accelerator are FM, LPCB, VdS, and CE Approved with European Conformity Valve Trim. See Figures 7 to 18.

For more information on Agency Approvals, contact Johnson Controls at the following office:

Kopersteden 1
7547 TJ Enschede
The Netherlands
Tel: +31-(0)53-428-4444
Fax: +31-(0)53-428-3377

Dry Pipe Valve
The DN65, DN80, DN100, and DN150 Model DPV-1 Dry Pipe Valves are for vertical installations (flow going up), and they are rated for use at a maximum service pressure of 16 bar. The nominal pressure loss versus flow is shown in Graph A, and the valve take-out dimensions are shown in Figure 2.

Flange connections are drilled per ISO 2084 (PN10/16) or ANSI B16.42 (Class 150). Flanges drilled in accordance with ANSI B16.42 are flat faced. The grooved outlet connections, as applicable, are cut in accordance with standard groove specifications for steel pipe. They are suitable for use with grooved end pipe couplings that are listed or approved for fire protection system service.

Threaded port connections per ISO 7-1 readily accept trim arrangements described in Figures 7 through 18.

Components of Model DPV-1 Valve assemblies are shown in Figure 1A for the DN65, DN80, and DN100 valves and in Figure 1B for the DN150 valve. The body and handhole cover are ductile iron. The handhole cover gasket is neoprene, and the clapper facing is EPDM. The air/water seat ring is brass, the clapper is copper, and both the clapper retaining plate and latch are bronze. The hinge pin is aluminum bronze, and the handhole cover fasteners are carbon steel.

Valve Trim
Valve trim arrangements are shown in Figures 7 through 18 and described in Table A. The valve trim forms a part of the laboratory approval of the Model DPV-1 Dry Pipe Valve and is necessary for the proper operation of the valve. Each package of trim includes the following items:

- Water Supply Pressure Gauge
- System Air Pressure Gauge
- Main Drain Valve
- Low Body Drain Valve
- Alarm Test Valve
- Automatic Drain Valve
- Provision For An Optional Accelerator

Air Supply
Table B provides system air pressure requirements as a function of the water supply pressure. The air (or nitrogen) pressure in the sprinkler system is recommended to be automatically maintained by using one of the following pressure maintenance devices, as appropriate:

- Model AMD-1 Air Maintenance Device (pressure reducing type). Refer to Technical Data Sheet TFP1221.
- Model AMD-2 Air Maintenance Device (compressor control type). Refer to Technical Data Sheet TFP1231.
- Model AMD-3 Nitrogen Maintenance Device (high pressure reducing type). Refer to Technical Data Sheet TFP1241.

Quick Opening Device
As an option, the Model DPV-1 Dry Pipe Valve may be acquired with the Model ACC-1 Dry Pipe Valve Accelerator as shown in Figure 4. The Model ACC-1 Dry Pipe Valve Accelerator is used to reduce the time to valve actuation following the operation of one or more automatic sprinklers.

Stop Valve
Stop valves upstream and downstream of the dry pipe valve are required for VdS Approved systems.

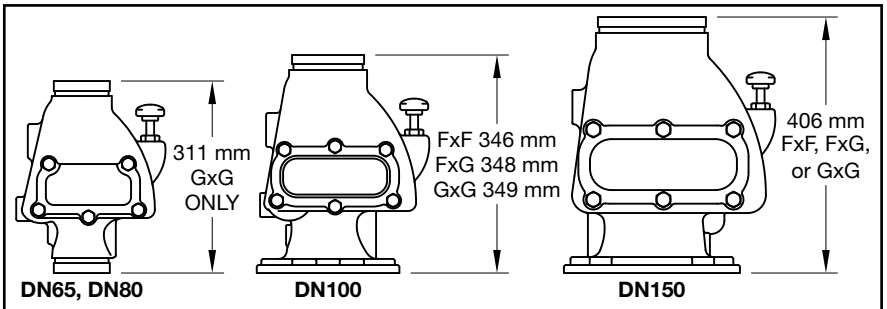

FIGURE 2
MODEL DPV-1 DRY PIPE VALVE
TAKE-OUT DIMENSIONS

Operating Principles

Dry Pipe Valve Operation
The TYCO Model DPV-1 Dry Pipe Valve is a differential type valve that utilizes a substantially lower system (air or nitrogen) pressure than the supply (water) pressure, to maintain the set position shown in Figure 3A. The differential nature of the DPV-1 valve is based on the area difference between the air seat and the water seat in combination with the ratio of the radial difference from the hinge pin to the center of the water seat and the hinge pin to the center of the air seat. The difference is such that the DPV-1 valve has a nominal trip ratio of 5.5:1 (water to air).

Table B establishes the minimum required system air pressure that includes a safety factor to help prevent false operations that occur due to water supply fluctuations.

The intermediate chamber of the DPV-1 ***v***alve is formed by the area between the air seat and water seat as shown in Figure 3B. The intermediate chamber normally remains at atmospheric pressure through the alarm port connection and the valve trim to the normally open automatic drain valve. See Figures 7 to 18. Having the intermediate chamber, Figure 3B, open to atmosphere is critical to the DPV-1 valve remaining set, otherwise the full resulting pressure of the system air pressure on top of the clapper assembly cannot be realized. For example, if the system air pressure is 1,7 bar and there was 1,0 bar pressure trapped in the intermediate chamber, the resulting pressure across the top of the clapper would only be 0,7 bar. This pressure would be insufficient to hold the clapper assembly closed against a water supply pressure of 6,9 bar.

When one or more automatic sprinklers operate in response to a fire, air pressure within the system piping is relieved through the open sprinklers. When the air pressure is sufficiently reduced,

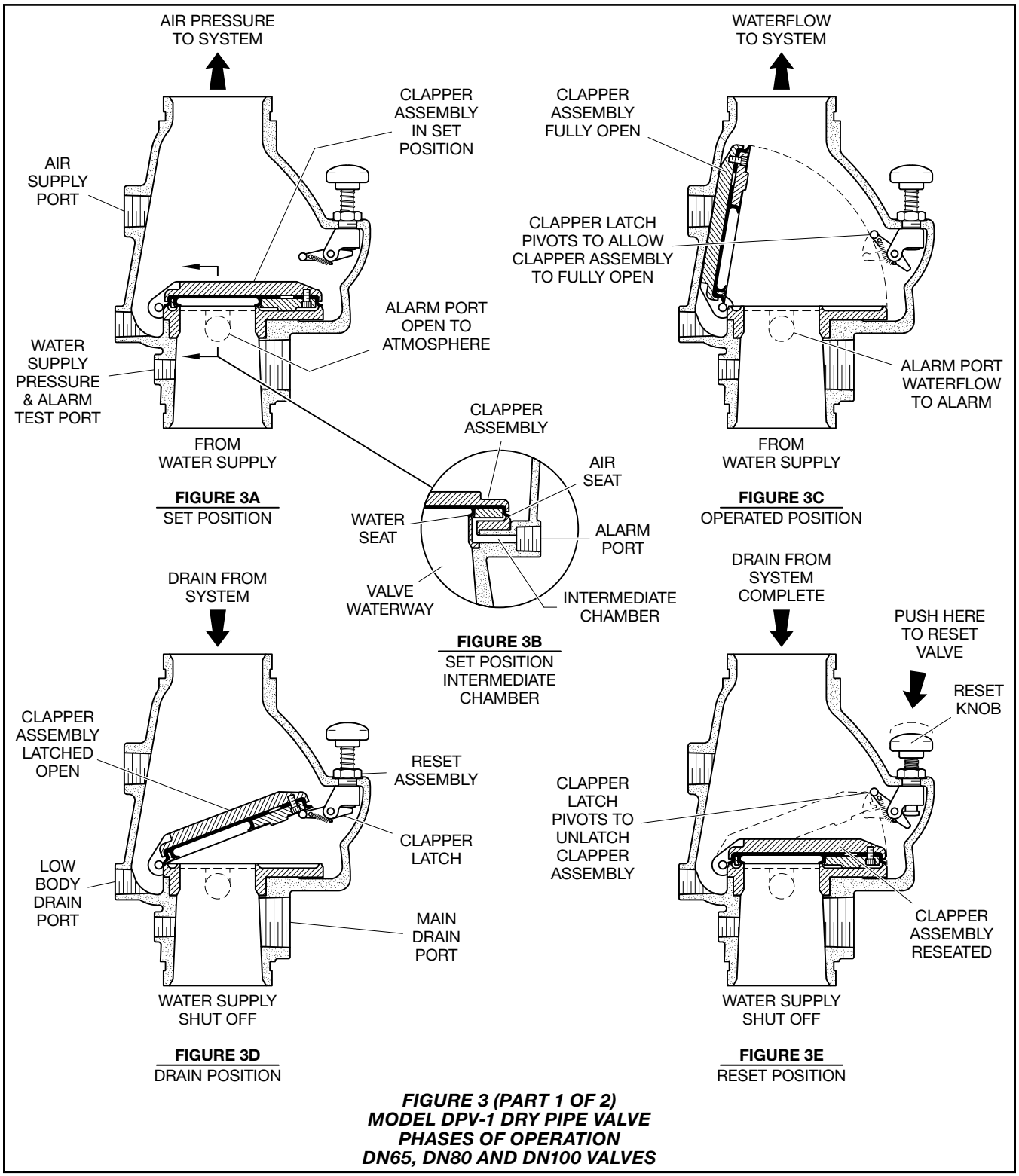

FIGURE 3 (PART 1 OF 2)
MODEL DPV-1 DRY PIPE VALVE
PHASES OF OPERATION
DN65, DN80 AND DN100 VALVES

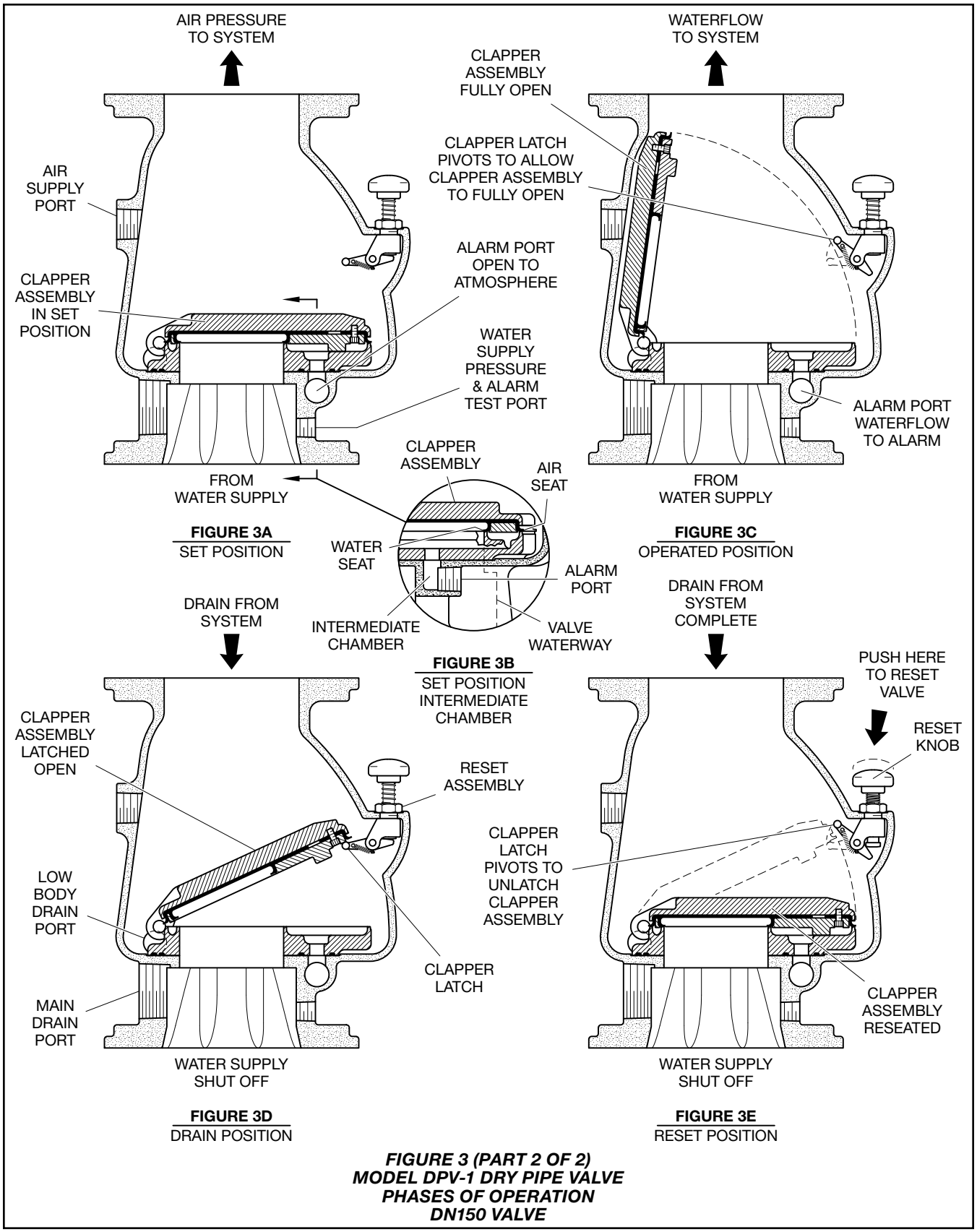

FIGURE 3 (PART 2 OF 2)
MODEL DPV-1 DRY PIPE VALVE
PHASES OF OPERATION
DN150 VALVE

NO.	DESCRIPTION	QTY.	P/N
1	Base	1	NR
2	Cover	1	NR
3	Upper Diaphragm Plate	1	See (c)
4	Pivot Plate Assembly	1	See (b)
4a	Spirol Pin	1	
4b	Pivot Plate	1	
5	Plunger	1	See (a)
5a	Pan Hd. Machine Screw	1	
5b	Upper Diaphragm Retaining Ring	2	
5c	Upper Diaphragm	1	
5d	Jam Nut	1	
6	Exhaust Valve	1	See (a)
6a	Upper Plug	1	
6b	Washer	1	
6c	Lower Diaphragm	1	
6d	Lower Plug	1	
6e	O-Ring*	1	
6f	O-Ring Retainer	1	
6g	Exhaust Valve Screw	1	
7	Rd. Head Machine Screw 1/4″-20 UNC x 5/8″	6	See (c)
8	Cover Gasket	1	See (a)
9	Vent Plug	1	See (c)
10	O-Ring*	1	See (a)
11	Restriction	1	See (a)
12	Restriction Access Plug	1	See (c)
13	Pan Hd. Machine Screw 10-32 UNF x 5/8″	4	See (b)
14	Cotter Pin	1	See (b)
15	Lever	1	See (b)
16	Retaining Ring	1	See (b)
17	Anti-Flood Valve	1	See (b)
18	Relief Valve	1	See (b)
19	Spring	1	See (b)
20	Relief Valve Seat	1	See (b)
21	O-Ring*	1	See (b)
22	Seal Washer	1	See (b)
23	Latch	1	See (a)
24	Fillister Hd. Machine Screw 1/4”-20 UNC x 1-1/2″	8	See (c)
25	Plug Seat	1	See (c)
26	O-Ring*	1	See (c)
27	O-Ring*	1	See (a)
28	Reset Knob	1	See (c)
29	Anti-Flood Seat Assembly w/Ball Float	1	See (b)
29a	Insert	1	
29b	Seal	1	
29c	Guide	1	
29d	Ball	1	
29e	Clip	1	
29f	O-Ring*	1	

* Requires thin film of FS3452 Fluorosilicone Grease

NR: Not Replaceable

Replacement Part Kits		
Kit	Description	P/N
Repair Parts Kit (a)	Includes Items 5, 6, 8, 10, 11, 23, 27, and 1.5 grams of FS3452	92-311-1-116
Replacement Parts Kit (b)	Include Items 4, 13-22, 29, and 1.5 grams of FS3452	92-311-1-117
Replacement Parts Kit (c)	Includes Items 3, 7, 9, 12, 24-26, 28, and 1.5 grams of FS3452	92-311-1-118

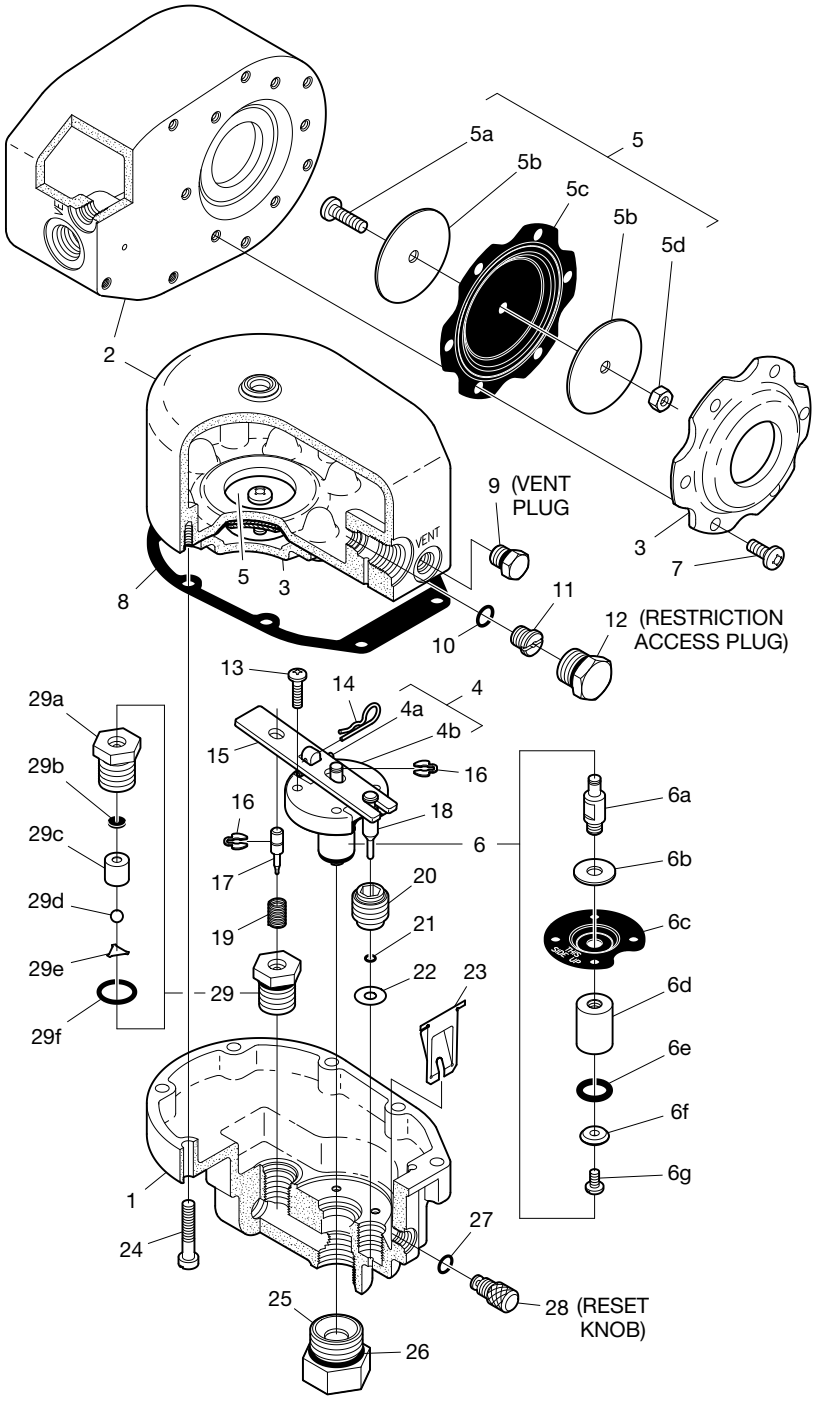

FIGURE 4
MODEL ACC-1 DRY PIPE VALVE ACCELERATOR ASSEMBLY

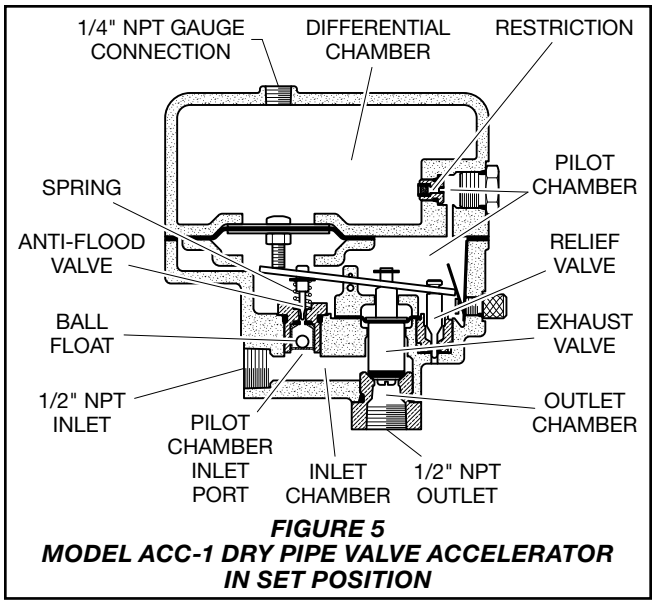

FIGURE 5
MODEL ACC-1 DRY PIPE VALVE ACCELERATOR IN SET POSITION

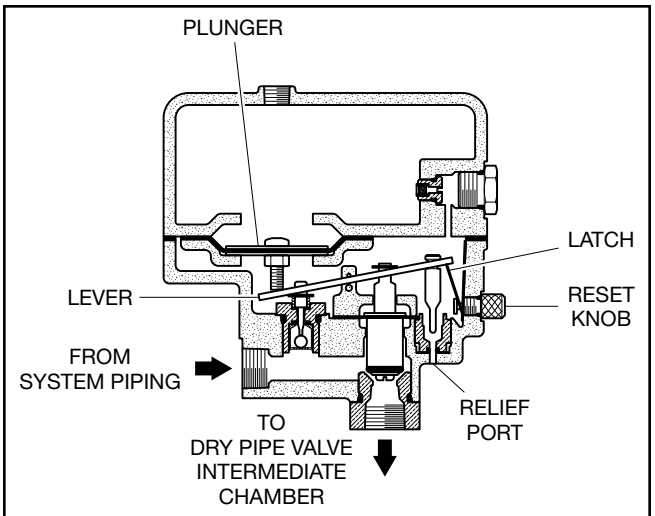

FIGURE 6
MODEL ACC-1 DRY PIPE VALVE ACCELERATOR IN TRIPPED POSITION

the water pressure overcomes the differential holding the clapper assembly closed and the clapper assembly swings clear of the water seat, as shown in Figure 3C. This action permits water flow into the system piping and subsequently to be discharged from any open sprinklers. Also, with the clapper assembly open, the intermediate chamber is pressurized and water flows through the alarm port as shown in Figure 3B at the rear of the DPV-1 valve. As the flow through the alarm port exceeds the drain capacity of the automatic drain valve, the alarm line is pressurized to actuate system water flow alarms.

After a valve actuation and upon subsequent closing of a system main control valve to stop water flow, the clapper assembly will latch open as shown in Figure 3D. Latching open of the DPV-1 valve will permit complete draining of the system (including any loose scale) through the main drain port.

During the valve resetting procedure and after the system is completely drained, the external reset knob can be easily depressed to externally unlatch the clapper assembly as shown in Figure 3E. As such, the clapper assembly is returned to its normal set position to facilitate setting of the dry pipe sprinkler system, without having to remove the handhole cover.

Accelerator Operation

The inlet chamber of the TYCO Model ACC-1 Dry Pipe Accelerator, as shown in Figure 5, is pressurized via its connection to the system. The pilot chamber is, in turn, pressurized through its inlet port which is formed by the annular opening around the lower tip of the anti-flood valve. As the pilot chamber increases in pressure, the differential chamber is pressurized through the restriction.

The accelerator is in its set position while it is being pressurized as well as after the inlet, pilot chamber and differential chamber pressures have equalized. When in the set position, the outlet chamber is sealed off by the exhaust valve which is held against its seat by a combination of the spring pushing up against the lever and the net downward force exerted by the pressure in the pilot chamber.

Both small and slow changes in system pressure are accommodated by flow through the restriction. When, however, there is a rapid and steady drop in system (that is, inlet and pilot chamber) pressure, the pressure in the differential chamber reduces at a substantially lower rate. This condition creates a net downward force on the plunger which rotates the lever. As the lever is rotated as shown in Figure 6, the relief valve is raised out of the relief port and the anti-flood valve is depressed downward into the pilot chamber inlet port, venting the pilot chamber.

The system pressure in the inlet chamber then forces (raises) the exhaust valve off its seat. This continues the rotation of the lever into the tripped (latched) position as shown in Figure 6. As the exhaust valve is raised off its seat, system pressure is transmitted to the intermediate chamber of the dry pipe valve which neutralizes the differential pressure holding the valve closed.

Water and any water borne debris such as silt is prevented from entering the pilot chamber by virtue of the anti-flood valve having sealed off its inlet port.

After the accelerator/dry pipe valve has tripped and the sprinkler system has been drained, the piping from the system to the accelerator must also be drained and the accelerator reset/inspected according to the instructions given in the Valve Setting Procedure section.

The rate-of-flow through the restriction has been set such that the Model ACC-1 Dry Pipe Valve Accelerator provides the maximum practical sensitivity to a loss in system pressure due to a sprinkler operation while still being capable of automatically compensating for normal variations in system pressure such as are caused by environmental temperature changes. A test for verifying that the rate-of-flow through the restriction is within the range for optimum accelerator performance is given in the Valve Setting Procedure section.

Installation

NOTICE

Alteration of the trim may prevent the Model DPV-1 Dry Pipe Valve from functioning properly, as well as void approvals and the manufacturer's warranties.

Failure to latch open the clapper assembly prior to a system hydrostatic test may result in damage to the clapper assembly.

The DPV-1 valve must be installed in a readily visible and accessible location.

The DPV-1 valve and associated trim must be maintained at a minimum temperature of 4°C.

Heat tracing of the DPV-1 valve or its associated trim is not permitted. Heat tracing can result in the formation of hardened mineral deposits that are capable of preventing proper operation.

Install TYCO Model DPV-1 Dry Pipe Valves in accordance with the following criteria:

- The DPV-1 valve must be installed with factory assembled trim.
- Suitable provision must be made for disposal of drain water. Drainage water must be directed such that it will not cause accidental damage to property or danger to persons.
- Installation of an air maintenance device, as described in the Technical Data Section, is recommended.
- It is best practice to install an appropriately rated and listed relief valve upstream of the DPV-1 valve, between the inlet of the DPV-1 valve and any check valves or back flow preventers, to ensure transient increases in water pressure do not cause unintended operation of the DPV-1 valve.
- An inspector's test connection must be provided on the system piping at the most remote location from the DPV-1 valve.
- Conduit and electrical connections are to be made in accordance with the requirements of the authority having jurisdiction.
- Before a system hydrostatic test is performed in accordance with the standards recognized by the Approval agency, in addition to any other authorities having jurisdiction, the clapper assembly is to be manually latched open as shown in Figure 3D; the automatic drain valve , as shown in Figures 7 to 18, is to be temporarily plugged; and, the handhole cover bolts are to be tightened using a cross-draw sequence.
- When installing the valve in a corrosive environment, including outdoor locations, protection from moisture, chemicals or fumes is highly recommended. Galvanic corrosion can result from joining unprotected dissimilar metals. For example, exposed steel pipe threads can become corroded if unprotected by painting or other coating methods. Where coating such exposed surfaces is impractical or unwanted, construct a rain-resistant roof or enclosure over the valve and trim.

Valve Setting Procedure

Perform this procedure when initially setting the Model DPV-1 Dry Pipe Valve; after an operational test of the fire protection system; or, after system operation due to a fire.

See Figures 7 to 18 as applicable for the given riser arrangement and proceed as follows:

Step 1. Close the main control valve, and close the air supply control valve. If the DPV-1 valve is equipped with a dry pipe valve accelerator, close the accelerator control valve.

Step 2. Open the main drain valve and all auxiliary drains in the system. Close the auxiliary drain valves after water ceases to discharge. Leave the main drain valve open.

Step 3. As applicable, place the three-way alarm control valve in the open position.

Step 4. Verify that the automatic drain valve has stopped draining to determine the DPV-1 valve is completely drained.

Step 5. As necessary, replace all sprinklers that have operated. Replacement sprinklers must be of the same type and temperature rating as those which have operated.

NOTICE

In order to prevent the possibility of a subsequent operation of an overheated solder type sprinkler, any solder type sprinklers which were possibly exposed to a temperature greater than their maximum rated ambient must be replaced.

Step 6. Push down on the reset knob as shown in Figure 3E to allow the clapper assembly to reseat.

Step 7. Pressurize the system with air (or nitrogen) to 0,7 bar, and then individually open all auxiliary drain valves in the system piping to drain any remaining water in trapped sections. Close each drain valve as soon as water ceases to discharge. Also partially open the low body drain valve in the valve trim to assure that the riser is completely drained. Close the low body drain valve as soon as water ceases to discharge.

Step 8. See Table B and then restore the system to the normal system air pressure as necessary to hold the DPV-1 valve closed.

Step 9. Verify that there is not any air discharging from the automatic drain valve.

The absence of air discharging from the automatic drain valve is an indication of a properly set air seat within the DPV-1 valve. If air is discharging, see the Care and Maintenance section under Automatic Drain Valve Inspection to determine/correct the cause of the leakage problem.

Step 10. If the DPV-1 valve is equipped with a dry pipe valve accelerator, reset the dry pipe valve accelerator in accordance with Steps 10A through 10H. Otherwise, proceed to Step 11.

a. While holding the plunger of the automatic drain valve depressed, open the accelerator control valve one-quarter turn and allow the water in the Accelerator piping to blow out. After water spray stops discharging, close the accelerator control valve and then release the plunger.

b. Slowly remove the vent plug located in the front of the accelerator cover and bleed off any residual air pressure in the differential chamber.

c. Unscrew (counter-clockwise rotation) the knurled reset knob at the front of the accelerator until it resists further turning. A click, which is the sound of the lever snapping back into the set position, may be heard. Screw the reset knob back in until it is finger tight.

NOTICE

Do not wrench on the reset knob, since damage may result. The reset knob will turn with finger torque only.

d. Replace the vent plug.

e. Verify that the system air pressure has returned to normal.

f. Using a watch, note the time for the pressure in the differential chamber of the accelerator to increase to 0,7 bar after the accelerator control valve is opened. The time should be within the range of values indicated in Table C for optimum performance of the accelerator. If the time to pressurize the differential chamber to 0,7 bar is not within the range of values given in the Table C, then the accelerator control valve should be closed and the corrective procedure described in the Care and Maintenance Section of ACC-1 Technical Data Sheet TFP1112 should be followed.

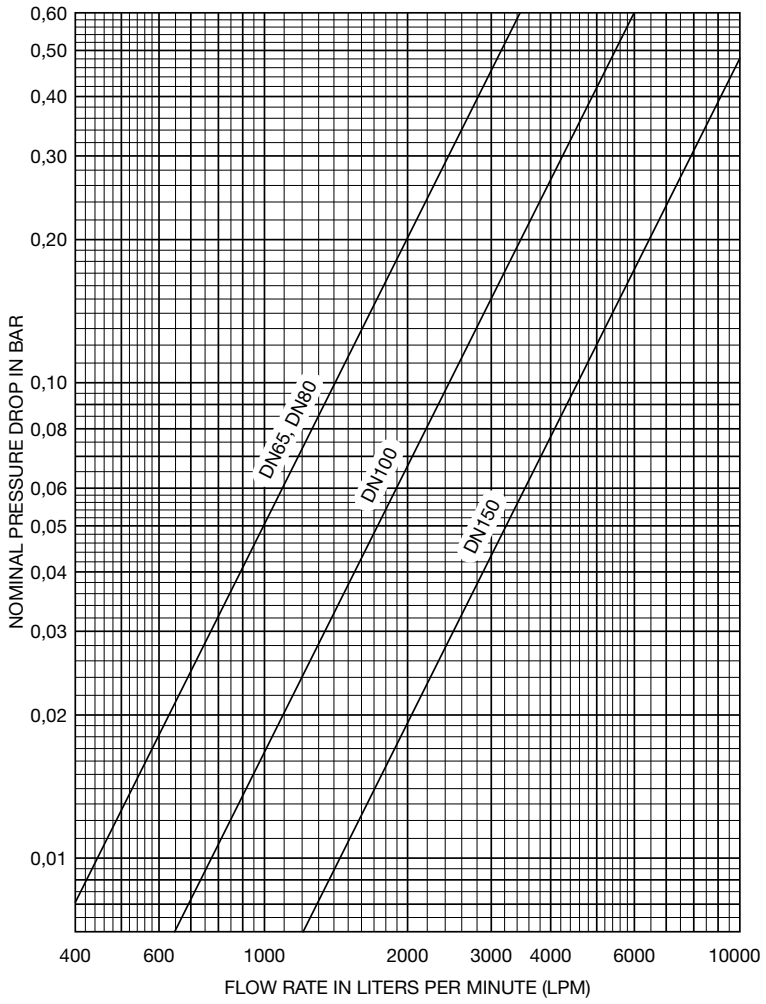

GRAPH A
MODEL DPV-1 DRY PIPE VALVE
NOMINAL PRESSURE LOSS VERSUS FLOW

g. When the air pressure in the differential chamber of the accelerator is equal to that in the system, then the accelerator is set and ready for service.

h. Close the accelerator control valve and then slowly open the low body drain valve in the trim, to bleed off any excess water trapped above the dry pipe valve clapper. Close the low body drain valve, return system pressure to its normal value, and then re-open the accelerator control valve.

Step 11. Partially open the main control valve. Slowly close the main drain valve as soon as water discharges from the drain connection.

Verify that there is not any water discharging from the automatic drain valve.

The absence of water discharging from the automatic drain valve is an indication of a properly set water seat within the DPV-1 valve. If water is discharging, see the Care and Maintenance section under the Automatic Drain Valve Inspection to determine/correct the cause of the leakage problem.

If there are no leaks, the Model DPV-1 Dry Pipe Valve is ready to be placed in service and the Main Control Valve must then be fully opened.

After setting a fire protection system, notify the proper authorities and advise those responsible for monitoring proprietary and/or central station alarms.

Step 12. Once a week after a valve is reset following an operational test or system operation, the low body drain valve (and any low point drain valves) should be partially opened (and then subsequently closed) to relieve drain-back water. Continue this procedure until drain-back water is no longer present.

Water Supply Pressure, bar	System Air Pressure Range, bar
1,4	0,7
4,1	1,0 - 1,6
5,5	1,4 - 1,9
6,9	1,7 - 2,3
8,3	2,1 - 2,6
10,0	2,4 - 3,0
11,4	2,8 - 3,3
12,8	3,1 - 3,7
14,1	3,4 - 4,0
15,5	3,8 - 4,3
16,0	4,6

TABLE B
SYSTEM AIR PRESSURE REQUIREMENTS

Pressure (bar)	Minimum (sec.)	Maximum (sec.)
1,4	24	160
1,7	18	116
2,1	15	92
2,8	10	60
3,5	8	48
4,1	6	36

TABLE C
ACCELERATOR DIFFERENTIAL CHAMBER FILL TIMES TO 0,7 BAR

Care and Maintenance

The following procedures and inspections should be performed as indicated, in addition to any specific requirements of any authority having jurisdiction. Impairments must be immediately corrected.

The owner is responsible for the inspection, testing, and maintenance of their fire protection system and devices in compliance with this document, as well as with the applicable standards of any authority having jurisdiction. The installing contractor or product manufacturer should be contacted relative to any questions.

Automatic sprinkler systems are recommended to be inspected, tested, and maintained by a qualified inspection service.

NOTICE

The operational test procedure and waterflow pressure alarm test procedure will result in operation of the associated alarms. Consequently, notification must first be given to the owner and the fire department, central station, or other signal station to which the alarms are connected.

Before closing a fire protection system Main Control Valve for maintenance work on the fire protection system that it controls, obtain permission to shut down the affected fire protection systems must first be obtained from the proper authorities and notify all personnel who may be affected by this decision must be notified.

Annual Operation
Test Procedure
Proper operation of the Model DPV-1 Dry Pipe Valve (that is, opening of the DPV-1 valve during a fire condition) should be verified at least once a year as follows:

Step 1. If water must be prevented from flowing beyond the riser, perform the following steps:

- **a.** Close the main control valve.
- **b.** Open the main drain valve.
- **c.** Open the main control valve one turn beyond the position at which water just begins to flow from the main drain valve.
- **d.** Close the main drain valve.

Step 2. Open the system's inspector's test connection.

Step 3. Verify that the DPV-1 valve has operated, as indicated by the flow of water into the system and that all waterflow alarms operate properly.

Step 4. Close the system main control valve.

Step 5. Reset the DPV-1 valve in accordance with the Valve Setting Procedure.

The inside of the valve is recommended to be inspected at this time and prior to resetting the DPV-1 valve. See Steps 2 to 5 in the Inspection Procedure section on the Automatic Drain Valve for instructions on the inspection of the clapper facing.

Periodic Waterflow Alarm
Test Procedure
Testing of the system waterflow alarms should be performed periodically based on the requirements of the authority having jurisdiction. To test the waterflow alarm, place the three-way alarm test valve in the "Test" position or open the standard alarm test valve, as applicable, which will allow a flow of water to the waterflow pressure alarm switch and/or water motor alarm. Upon satisfactory completion of the test, place the three-way alarm test valve in the "Open" position or close the standard alarm test valve, as applicable.

Water Pressure
Inspection Procedure
The water pressure gauge is to be inspected periodically based on the requirements of the authority having jurisdiction to ensure that normal system water pressure is being maintained.

Air Pressure
Inspection Procedure
The air pressure gauge is to be inspected periodically based on the requirements of the authority having jurisdiction to ensure that normal system air pressure is being maintained.

Automatic Drain Valve
Inspection Procedure
The automatic drain valve should be inspected periodically based on the requirements of the authority having jurisdiction by depressing the plunger and checking to ensure that the automatic drain valve is not discharging water and/or air. A discharge of water and/or air is an indication that the air and/or water seats are leaking, which could subsequently cause a false operation should the intermediate chamber become inadvertently pressurized.

If leakage is present, take the DPV-1 valve out of service (that is, close the main control valve, open the main drain valve, close the air supply control valve, remove the dry pipe valve accelerator from service, as applicable, by closing the accelerator control valve, and open the inspector's test connection to relieve the system air pressure to 0 psig as indicated on the system air pressure gauge), and then after removing the handhole cover, perform the following steps:

Step 1. Make sure that the seat ring is clean and free of any nicks or significant scratches.

Step 2. Remove the clapper assembly from the valve by first pulling out the hinge pin.

Step 3. Disassemble the clapper facing retainer from the clapper so that the clapper facing can be removed and inspected. Make sure that the clapper facing does not show signs of compression set, damage, etc. Replace the clapper facing if there is any signs of wear.

Step 4. Clean the clapper facing, clapper, and clapper facing retainer, and then reassemble the clapper assembly.

Nominal Valve Sizes DN	Handhole Cover Bolt Torque lb-ft (N·m)
DN65	20 (27)
DN80	20 (27)
DN100	20 (27)
DN150	45 (61)

TABLE D
HANDHOLE COVER BOLTS RECOMMENDED TORQUE

Step 5. Reinstall the clapper assembly with its hinge pin.

Step 6. Install the handhole cover:

- **a.** Align the handhole cover gasket and handhole cover in the proper orientation with the valve body as shown in Figure 1, and hold in place.
- **b.** Apply LOCTITE No. 242 (or equivalent) to the hex bolt threads.
- **c.** Insert the hex bolts through the handhole cover gasket and handhole cover, and hand-tighten into the valve body.
- **d.** Using a crossdraw sequence to assure uniformity, wrench-tighten the hex bolts to the recommended torque values as shown in Table D.
- **e.** Inspect to ensure all the hex bolts are securely tightened.

Accelerator
Inspection Procedure
It is recommended that the accelerator be inspected periodically based on the requirements of the authority having jurisdiction to determine proper operation of the accelerator without having to trip the dry pipe valve. This procedure must also be used whenever flooding the system would expose the water to freezing conditions.

See Technical Data Sheet TFP1112 for guidance with regard to trouble shooting of the Model ACC-1 Dry Pipe Valve Accelerator.

Step 1. Verify that the reset knob is screwed in.

Step 2. Close the system main control valve and open the main drain valve to relieve the supply pressure to the dry pipe valve.

Step 3. Verify that the accelerator control valve is open.

P/N XX — X — XX — XX — X — XX

END CONNECTION	
27	Flange x Flange PN10/PN16
28	Flange x Groove PN10/PN16
2B	Groove x Groove

SIZE	
0	DN65 76,1 mm
3	DN80 88,9 mm
4	DN100 114,3 mm
6	DN150 168,3 mm
7	165,1 mm

TRIM	
88	EUR/FM with Three-Way Alarm Control Valve
89	EUR/FM with Standard Alarm Test Valve

SWITCH	
1	PS10-1 or TPS10X1

STOP VALVE	
00	To be ordered separately
21	Included[a]

ACCELERATOR	
00	None
01	European Conformity Trim with Accelerator and Accelerator Control Valve

Notes:
a. Applicable to VdS Approved 88 trim option only

TABLE E
MODEL DPV-1 DRY PIPE VALVE WITH EUROPEAN CONFORMITY TRIM
FULLY TRIMMED VALVE ASSEMBLIES
PART NUMBER SELECTION

Step 4. Open the inspector's test connection. Verify that the time to accelerator trip is essentially the same as in previous tests. A momentary burst of air from the automatic drain valve indicates that the accelerator has tripped.

As the system pressure is decreasing, check for any sign of water being discharged from the accelerator relief port.

Step 5. Depress the plunger of the automatic drain valve. A steady stream of exhausting air indicates that the accelerator has properly latched in the tripped position.

Step 6. Close the accelerator control valve and the inspector's test connection.

Step 7. After the system automatically restores itself to its normal air pressure, reset the accelerator and dry pipe valve in accordance with the Valve Setting Procedure Steps 10 and 11.

Limited Warranty

For warranty terms and conditions, visit www.tyco-fire.com.

Ordering Procedure

Contact your local distributor for availability. When placing an order, indicate the full product name and Part Number (P/N).

Model DPV-1 Dry Pipe Valve with Assembled European Conformity Valve Trim
Specify: Fully Assembled Model DPV-1 Dry Pipe Valve with European Conformity Valve Trim, P/N (specify, see Table E).

Accessories
Specify: (description) for use with (specify size) Model DPV-1 Dry Pipe Valve, P/N (specify):

Supervisory Switch for Accelerator Control Valve. SUPSWITCHBI2DN15-1

Supervisory Switch for Water Motor Alarm Control Valve. SUPSWITCHBI2DN15-1

Air Pressure Relief Valve Factory-set at 3,1 bar 92-343-1-020

Model WMA-1 Water Motor Alarm Red Finish Gong 52-630-1-021R

A through Z Labels for Attaching to Valve Components WS00000033

Supervisory Switch for Alarm Test/Shut-off Valve WS00000011-1

Low Pressure Switch Kit CEDPV1LPS

NO.	DESCRIPTION	QTY.	P/N
1	Copper Tube, 15 x 1 mm, Type B	1	WS00000082
2	Pressure Relief Hose, Transparent 3 x 6 x 1.2 m	2	WS00000004
3	Adapter Tee, DN15 Male Thd x DN15 Female Thd x DN15 Female Thd	1	TTDMDDFN
4	Adapter Tee, DN15 Male Thd x DN15 Male Thd x DN15 Female Thd	2	TTDDMDFN
5	Adapter Tee, DN15 x DN15 x DN15 Female Thd	1	TTDDDFN
6	Reducer, DN20 Male Thd x DN15 Female Thd	1	RTEMDFN
7	Reducer, DN20 Female Thd x DN15 Male Thd	1	RTDMEFN
8	Adapter Reducer, DN15 Male Thd x DN8 Female Thd	2	RTDMBFN
9	Plug, DN15 Male Thd	2	PTDN
10	Manifold, 1" BSP Female Thd, 3 x 1/2" BSP Female Thd Outlets	1	MANIF3WAY
11	Ball Valve, 3-way, 1/2" BSP	1	K00128
12	Elbow, DN20 Male Thd x DN20 Female Thd	2	ETEMEFN
13	Elbow, DN15 Male Thd x DN15 Female Thd	3	ETDMDFN
14	Adapter Elbow, DN15 Male Thd x 15 mm Compression	1	ETDMCON
15	Elbow, DN15 x DN15 Male Thd	1	ETDDMN
16	Elbow, DN15 x DN15 Female Thd	1	ETDDFN
17	Adapter Fitting, DN15 Female Thd x 15 mm Compression	1	ATDFCON
18	Adapter Fitting, DN15 x DN15 Male Thd	3	ATDDMN
19	Pipe Nipple, DN65 Valve, 1" BSP Thd x 90 mm.	1	AP90F2
	Pipe Nipple, DN80 Valve, 1" BSP Thd x 80 mm.	1	AP80F2

NO.	DESCRIPTION	QTY.	P/N
20	Pipe Nipple, DN65 Valve, 1/2" BSP Thd x 100 mm	1	AP100D4
	Pipe Nipple, DN80 Valve, 1/2" BSP Thd x 80 mm	1	AP80D4
21	Pipe Nipple, 1/2" BSP Thd x 180 mm	1	AP180D4
22	Pipe Nipple, 1-1/2" BSP Thd x 150 mm.	1	AP150H2
23	Pipe Nipple, 3/4" BSP Thd x 100 mm	1	AP100E4
24	Pipe Nipple, 1/2" BSP Thd x 100 mm	1	AP100D4
25	Plug, 3/4" BSP Thd	1	A291E2
26	Pipe Nipple, 1-1/2" BSP Thd	1	A280H2
27	Reducing Tee, 1-1/2" x 1-1/2" x 1/2" BSP Female Thd		A130RHHD2
28	Air Pressure Gauge, 250 PSI	1	923431012
29	Ball Valve, DN15 with M5 Vent Hole.	2	59304FO
30	Model DPV-1 Dry Pipe Valve, Groove x Groove DN65 Valve	1	523131925
	DN80 Valve	1	523131930
31	Elbow WES 3 mm/M5	2	406012
32	Check Valve, DN15 Male Thd x DN15 Female Thd	1	305105
33	1/2" Self-Closing Drain Valve	1	2162156
34	Ball Valve, DN40 Thd	1	1610000480
35	Ball Valve, DN20 Thd	1	1610000270
36	Ball Valve, DN15 Thd	1	1610000210
37	Pressure Alarm Switch, PS10-1 or TPS10X1	1	0260 or 100101
38	Water Pressure Gauge, 300 PSI / 21 bar	1	025500013

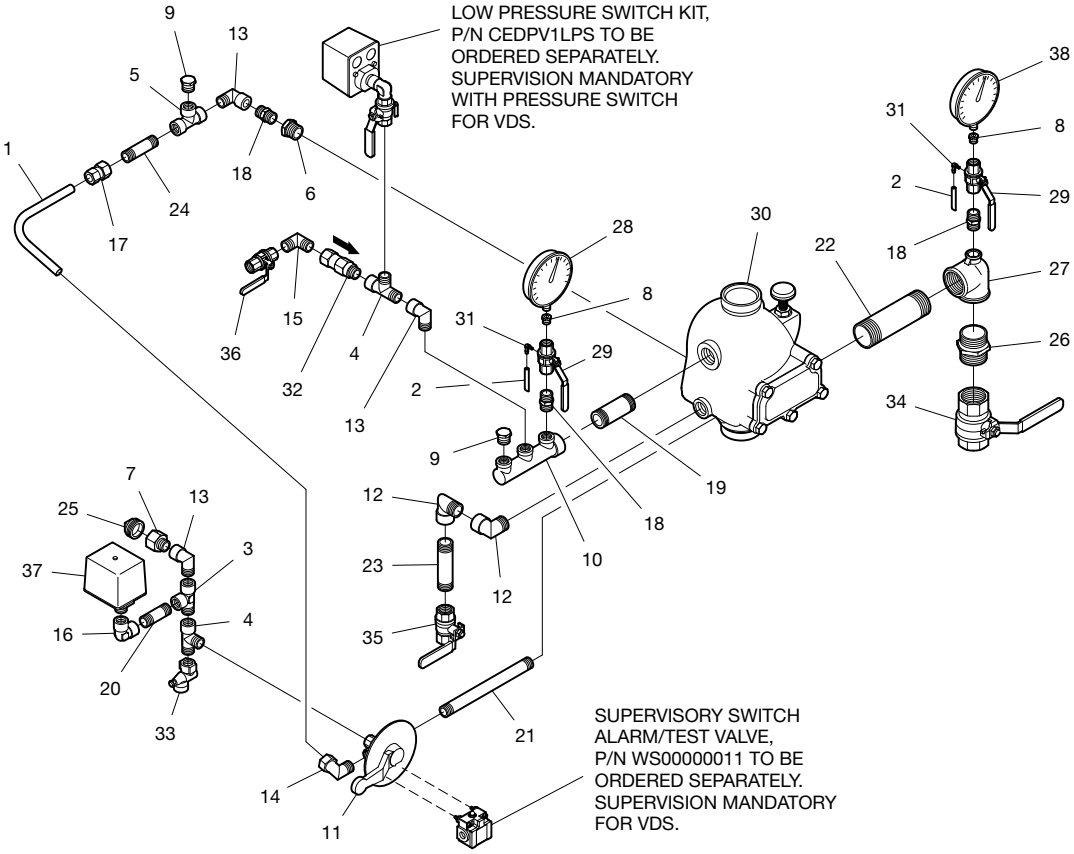

FIGURE 7
MODEL DPV-1 DRY PIPE VALVE EUROPEAN CONFORMITY TRIM WITH THREE-WAY ALARM TEST VALVE DN65 AND DN80

NO.	DESCRIPTION	QTY.	P/N
1	Copper Tube, 15 x 1 mm, Type B	1	WS00000082
2	Pressure Relief Hose, Transparent, 3 x 6 x 1.2 m	2	WS00000004
3	Adapter Tee, DN15 Male Thd x DN15 Female Thd x DN15 Female Thd.	1	TTDMDDFN
4	Adapter Tee, DN15 Male Thd x DN15 Male Thd x DN15 Female Thd.	2	TTDDMDFN
5	Adapter Tee, DN15 x DN15 x DN15 Female Thd	1	TTDDDFN
6	Reducer, DN20 Male Thd x DN15 Female Thd	1	RTEMDFN
7	Reducer, DN20 Female Thd x DN15 Male Thd	1	RTDMEFN
8	Adapter Reducer, DN15 Male Thd x DN8 Female Thd	2	RTDMBFN
9	Plug, DN15 Male Thd	2	PTDN
11	Manifold, 1" BSP Female Thd, 3 x 1/2" BSP Female Thd Outlets	1	MANIF3WAY
12	Ball Valve, 3-way, 1/2" BSP	1	K00128
13	Elbow, DN20 Male Thd x DN20 Female Thd	2	ETEMEFN
14	Elbow, DN15 Male Thd x DN15 Female Thd	3	ETDMDFN
15	Adapter Elbow, DN15 Male Thd x 15 mm Compression	1	ETDMCON
16	Elbow, DN15 x DN15 Male Thd	1	ETDDMN
17	Elbow, DN15 x DN15 Female Thd	1	ETDDFN
18	Adapter Fitting, DN15 Female Thd x 15 mm Compression	1	ATDFCON
19	Adapter Fitting, DN15 x DN15 Male Thd	3	ATDDMN

NO.	DESCRIPTION	QTY.	P/N
20	Pipe Nipple, 1" BSP Thd x 80 mm	1	AP80F2
21	Pipe Nipple, 1/2" BSP Thd x 60 mm	1	AP60D4
22	Pipe Nipple, 1/2" BSP Thd x 180 mm	1	AP180D4
23	Pipe Nipple, 2" BSP Thd x 120 mm	1	AP120I2
24	Pipe Nipple, 3/4" BSP Thd x 100 mm	1	AP100E4
25	Pipe Nipple, 1/2" BSP Thd x 100 mm	1	AP100D4
26	Plug, 3/4" BSP Thd	1	A291E2
27	Pipe Nipple, 2" BSP Thd	1	A280I2
28	Reducing Tee, 2" x 2" x 1/2", BSP Female Thd	1	A130RIID2
29	Air Pressure Gauge, 250 PSI	1	923431012
30	Ball Valve, DN15 with M5 Vent Hole.	2	59304FO
31	Model DPV-1 Dry Pipe Valve, Groove x Groove, DN100	1	523131940
32	Elbow WES 3 mm/M5	2	406012
33	Check Valve, DN15 Male Thd x DN15 Female Thd	1	305105
34	1/2" Self-Closing Drain Valve	1	2162156
35	Ball Valve, DN50 Thd	1	1610000600
36	Ball Valve, DN20 Thd	1	1610000270
37	Ball Valve, DN15 Thd	1	1610000210
38	Pressure Alarm Switch, PS10-1 or TPS10X1	1	0260 or 100101
39	Water Pressure Gauge, 300 PSI / 21 bar	1	025500013

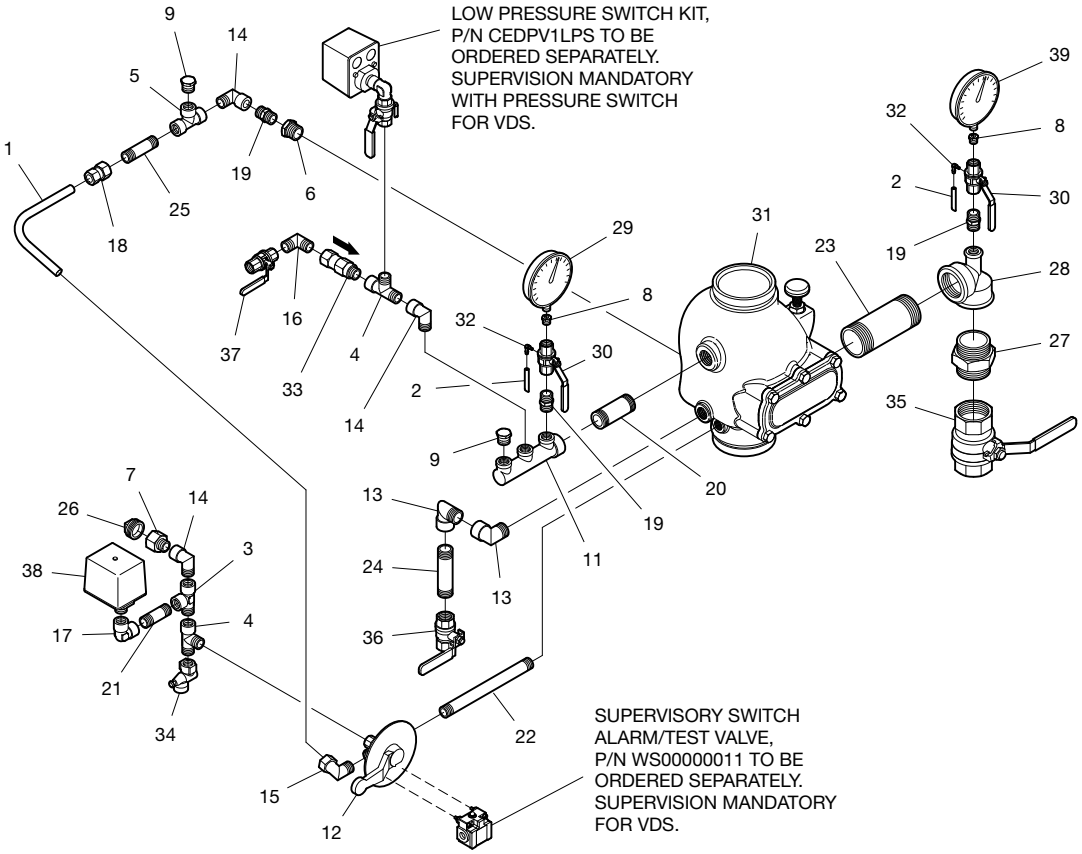

FIGURE 8
MODEL DPV-1 DRY PIPE VALVE EUROPEAN CONFORMITY TRIM WITH THREE-WAY ALARM TEST VALVE DN100

NO.	DESCRIPTION	QTY.	P/N
1	Ball Valve, 3-way, 1/2” BSP	1	WS00000095
2	Copper Tube, 15 x 1 mm, Type B	1	WS00000082
3	Pressure Relief Hose, Transparent, 3 x 6 x 1.2 m	2	WS00000004
4	Adapter Tee, DN15 Male Thd x DN15 Male Thd x DN15 Female Thd.	2	TTDDMDFN
5	Adapter Tee, DN15 x DN15 x DN15 Female Thd	2	TTDDDFN
6	Reducer, DN20 Female Thd x DN15 Male Thd	2	RTDMEFN
7	Adapter Reducer, DN15 Male Thd x DN8 Female Thd	2	RTDMBFN
8	Plug, DN15 Male Thd	2	PTDN
10	Manifold, 1” BSP Female Thd, 3 x 1/2” BSP Female Thd Outlets	1	MANIF3WAY
11	Elbow, DN20 Male Thd x DN20 Female Thd	1	ETEMEFN
12	Elbow, DN20 Male Thd x DN20 Male Thd	1	ETEEMN
13	Elbow, DN15 Male Thd x DN15 Female Thd	3	ETDMDFN
14	Adapter Elbow, DN15 Male Thd x 15 mm Compression	1	ETDMCON
15	Elbow, DN15 x DN15 Male Thd	1	ETDDMN
16	Adapter Fitting, DN15 Female Thd x 15 mm Compression	1	ATDFCON
17	Adapter Fitting, DN15 x DN15 Male Thd	2	ATDDMN
18	Pipe Nipple, 1” BSP Thd x 80 mm	1	AP80F2
19	Pipe Nipple, 1/2” BSP Thd x 60 mm	1	AP60D4

NO.	DESCRIPTION	QTY.	P/N
20	Pipe Nipple, 1/2” BSP Thd x 180 mm	1	AP180D4
21	Pipe Nipple, 3/4” BSP Thd x 120 mm	1	AP120E4
22	Pipe Nipple, 2” BSP Thd x 100 mm	1	AP100I2
23	Pipe Nipple, 1/2” BSP Thd x 100 mm	1	AP100D4
24	Plug, 3/4” BSP Thd	1	A291E2
25	Pipe Nipple, 2” BSP Thd	1	A280I2
26	Reducing Tee, 2” x 2” x 1/2”, BSP Female Thd	1	A130RIID2
27	Air Pressure Gauge, 250 PSI	1	923431012
28	Ball Valve, DN15 with M5 Vent Hole.	2	59304FO
29	Model DPV-1 Dry Pipe Valve, Groove x Groove, DN150	1	523131960
30	Elbow WES 3 mm/M5	2	406012
31	Check Valve, DN15 Male Thd x DN15 Female Thd	1	305105
32	1/2” Self-Closing Drain Valve	1	2162156
33	Ball Valve, DN50 Thd	1	1610000600
34	Ball Valve, DN20 Thd	1	1610000270
35	Ball Valve, DN15 Thd	1	1610000210
36	Pressure Alarm Switch, PS10-1 or TPS10X1	1	0260 or 100101
37	Water Pressure Gauge, 300 PSI / 21 bar	1	025500013

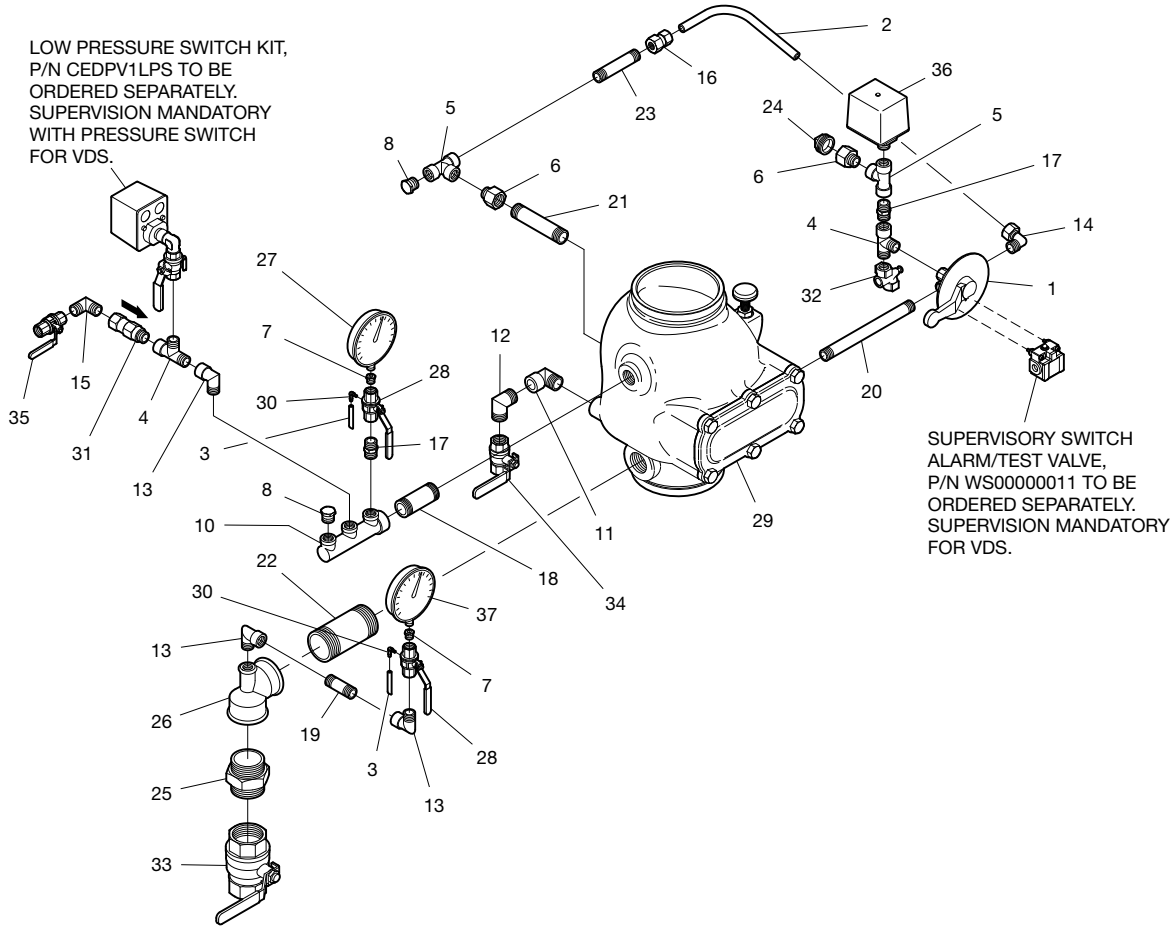

FIGURE 9
MODEL DPV-1 DRY PIPE VALVE EUROPEAN CONFORMITY TRIM
WITH THREE-WAY ALARM TEST VALVE
DN150

NO.	DESCRIPTION	QTY.	P/N
1	Copper Tube, 15 x 1 mm, Type B	1	WS00000082
2	Copper Tube, 1 mm x 1 m	1	WS00000008
3	Pressure Relief Hose, Transparent 3 x 6 x 1.2 m	2	WS00000004
4	Spring Loaded Check Valve, 1/2" NPT	1	V923221002
5	Adapter Tee, DN15 Male Thd x DN15 Female Thd x DN15 Female Thd.	3	TTDMDDFN
6	Adapter Tee, DN15 Male Thd x DN15 Male Thd x DN15 Female Thd.	2	TTDDMDFN
7	Adapter Tee, DN15 x DN15 x DN15 Female Thd	1	TTDDDFN
8	Reducer, DN20 Male Thd x DN15 Female Thd	1	RTEMDFN
9	Reducer, DN20 Female Thd x DN15 Male Thd	1	RTDMEFN
10	Adapter Reducer, DN15 Male Thd x DN8 Female Thd	3	RTDMBFN
11	Plug, DN15 Male Thd	2	PTDN
12	Manifold, 1" BSP Female Thd, 3 x 1/2" BSP Female Thd Outlets	1	MANIF3WAY
13	Elbow, DN20 Male Thd x DN20 Female Thd	2	ETEMEFN
14	Elbow, DN15 Male Thd x DN15 Female Thd	3	ETDMDFN
15	Elbow, DN15 x DN15 Male Thd	1	ETDDMN
16	Elbow, DN15 x DN15 Female Thd	1	ETDDFN
17	Adapter Fitting, DN15 Male Thd x 15 mm Compression	1	ATDMCON
18	Adapter Fitting, DN15 Female Thd x 15 mm Compression	1	ATDFCON
19	Adapter Fitting, DN15 x DN15 Male Thd	3	ATDDMN
20	Pipe Nipple, DN65 Valve, 1" BSP Thd x 90 mm.	1	AP90F2
	Pipe Nipple, DN80 Valve, 1" BSP Thd x 80 mm.	1	AP80F2

NO.	DESCRIPTION	QTY.	P/N
21	Pipe Nipple, 1/2" BSP Thd x 60 mm	2	AP60D4
22	Pipe Nipple, 1-1/2" BSP Thd x 150 mm.	1	AP150H2
23	Pipe Nipple, 3/4" BSP Thd x 100 mm	1	AP100E4
24	Pipe Nipple, DN65 Valve, 1/2" BSP Thd x 120 mm	1	AP120D4
	Pipe Nipple, DN80 Valve, 1/2" BSP Thd x 100 mm	1	AP100D4
25	Plug, 3/4" BSP Thd	1	A291E2
26	Pipe Nipple, 1-1/2" BSP Thd	1	A280H2
27	Reducing Tee, 1-1/2" x 1-1/2" x 1/2" BSP Female Thd		A130RHHD2
28	Air Pressure Gauge, 250 PSI	1	923431012
29	Anti Flood Fitting, 3/32" Restriction	1	920321002
30	Ball Valve, DN15 with M5 Vent Hole.	2	59304FO
31	Model DPV-1 Dry Pipe Valve, Groove x Groove		
	DN65 Valve	1	523131925
	DN80 Valve	1	523131930
32	Elbow WES 3 mm/M5	2	406012
33	Check Valve, DN15 Male Thd x DN15 Female Thd	1	305105
34	1/2" Self-Closing Drain Valve	1	2162156
35	Ball Valve, DN40 Thd	1	1610000480
36	Ball Valve, DN20 Thd	1	1610000270
37	Ball Valve, DN15 Thd	3	1610000210
38	Pressure Alarm Switch, PS10-1 or TPS10X1	1	0260 or 100101
38	Water Pressure Gauge, 300 PSI / 21 bar	1	025500013

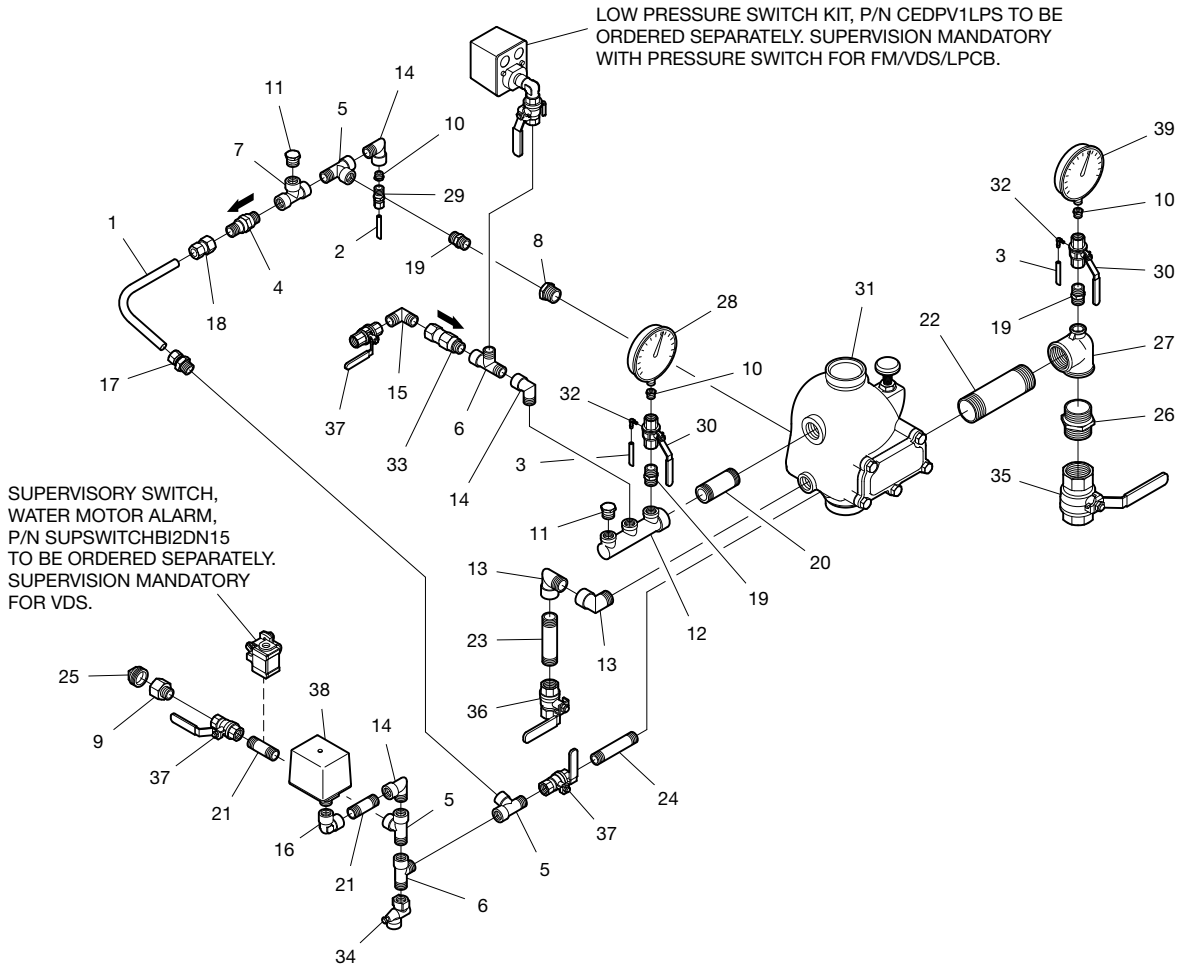

FIGURE 10
MODEL DPV-1 DRY PIPE VALVE EUROPEAN CONFORMITY TRIM WITH STANDARD ALARM TEST VALVE DN65 AND DN80

NO.	DESCRIPTION	QTY.	P/N
1	Copper Tube, 15 x 1 mm, Type B	1	WS00000082
2	Copper Tube, 1 mm x 1 m	1	WS00000008
3	Pressure Relief Hose, Transparent, 3 x 6 x 1.2 m	2	WS00000004
4	Spring Loaded Check Valve, 1/2" NPT	1	V923221002
5	Adapter Tee, DN15 Male Thd x DN15 Female Thd x DN15 Female Thd.	3	TTDMDDFN
6	Adapter Tee, DN15 Male Thd x DN15 Male Thd x DN15 Female Thd.	2	TTDDMDFN
7	Adapter Tee, DN15 x DN15 x DN15 Female Thd	1	TTDDDFN
8	Reducer, DN20 Male Thd x DN15 Female Thd	1	RTEMDFN
9	Reducer, DN20 Female Thd x DN15 Male Thd	1	RTDMEFN
10	Adapter Reducer, DN15 Male Thd x DN8 Female Thd	3	RTDMBFN
11	Plug, DN15 Male Thd	2	PTDN
12	Manifold, 1" BSP Female Thd, 3 x 1/2" BSP Female Thd Outlets	1	MANIF3WAY
13	Elbow, DN20 Male Thd x DN20 Female Thd	2	ETEMEFN
14	Elbow, DN15 Male Thd x DN15 Female Thd	3	ETDMDFN
15	Elbow, DN15 x DN15 Male Thd	1	ETDDMN
16	Elbow, DN15 x DN15 Female Thd	1	ETDDFN
17	Adapter Elbow, DN15 Male Thd x 15 mm Compression	1	ETDMCON
18	Adapter Fitting, DN15 Female Thd x 15 mm Compression	1	ATDFCON

NO.	DESCRIPTION	QTY.	P/N
19	Adapter Fitting, DN15 x DN15 Male Thd	3	ATDDMN
20	Pipe Nipple, 1" BSP Thd x 80 mm	1	AP80F2
21	Pipe Nipple, 1/2" BSP Thd x 60 mm	2	AP60D4
22	Pipe Nipple, 2" BSP Thd x 120 mm	1	AP120I2
23	Pipe Nipple, 3/4" BSP Thd x 100 mm	1	AP100E4
24	Pipe Nipple, 1/2" BSP Thd x 100 mm	1	AP100D4
25	Plug, 3/4" BSP Thd	1	A291E2
26	Pipe Nipple, 2" BSP Thd	1	A280I2
27	Reducing Tee, 2" x 2" x 1/2", BSP Female Thd	1	A130RIID2
28	Air Pressure Gauge, 250 PSI	1	923431012
29	Anti Flood Fitting, 3/32" Restriction	1	920321002
30	Ball Valve, DN15 with M5 Vent Hole.	2	59304FO
31	Model DPV-1 Dry Pipe Valve, Groove x Groove, DN100	1	523131940
32	Elbow WES 3 mm/M5	2	406012
33	Check Valve, DN15 Male Thd x DN15 Female Thd	1	305105
34	1/2" Self-Closing Drain Valve	1	2162156
35	Ball Valve, DN50 Thd	1	1610000600
36	Ball Valve, DN20 Thd	1	1610000270
37	Ball Valve, DN15 Thd	1	1610000210
38	Pressure Alarm Switch, PS10-1 or TPS10X1	1	0260 or 100101
39	Water Pressure Gauge, 300 PSI / 21 bar	1	025500013

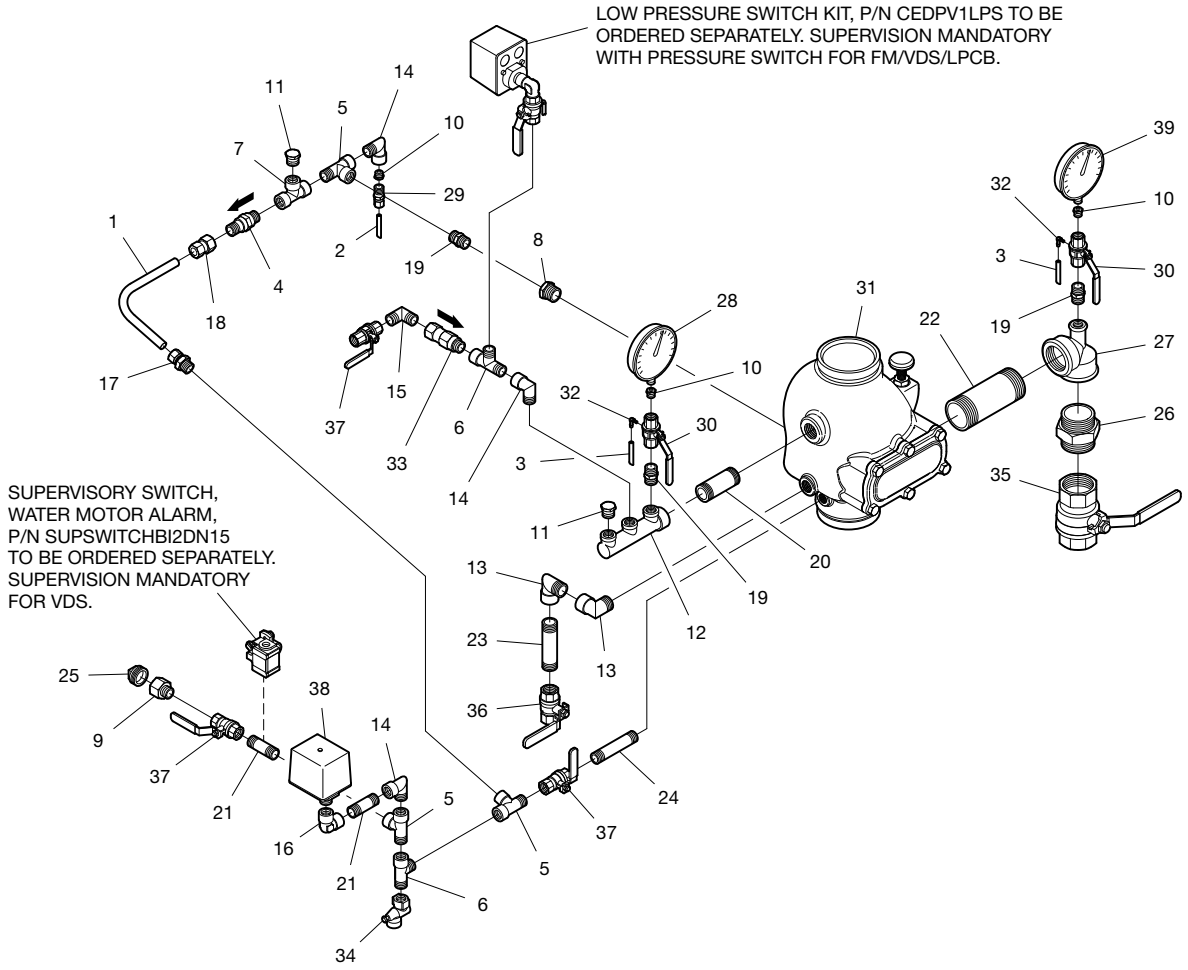

FIGURE 11
MODEL DPV-1 DRY PIPE VALVE EUROPEAN CONFORMITY TRIM WITH STANDARD ALARM TEST VALVE DN100

NO.	DESCRIPTION	QTY.	P/N
1	Copper Tube, 15 x 1 mm, Type B	1	WS00000082
2	Copper Tube, 1 mm x 1 m	1	WS00000008
3	Pressure Relief Hose, Transparent, 3 x 6 x 1.2 m	2	WS00000004
4	Spring Loaded Check Valve, 1/2" NPT	1	V923221002
5	Adapter Tee, DN15 Male Thd x DN15 Female Thd x DN15 Female Thd.	3	TTDMDDFN
6	Adapter Tee, DN15 Male Thd x DN15 Male Thd x DN15 Female Thd.	2	TTDDMDFN
7	Adapter Tee, DN15 x DN15 x DN15 Female Thd	1	TTDDDFN
8	Reducer, DN20 Female Thd x DN15 Male Thd	2	RTDMEFN
9	Adapter Reducer, DN15 Male Thd x DN8 Female Thd	3	RTDMBFN
10	Plug, DN15 Male Thd	2	PTDN
11	Manifold, 1" BSP Female Thd, 3 x 1/2" BSP Female Thd Outlets	1	MANIF3WAY
12	Elbow, DN20 Male Thd x DN20 Female Thd	1	ETEMEFN
13	Elbow, DN20 Male Thd x DN20 Male Thd	1	ETEEMN
14	Elbow, DN15 Male Thd x DN15 Female Thd	3	ETDMDFN
15	Elbow, DN15 x DN15 Male Thd	1	ETDDMN
16	Adapter Fitting, DN15 Male Thd x 15 mm Compression	1	ATDMCON
17	Adapter Fitting, DN15 Female Thd x 15 mm Compression	1	ATDFCON
18	Adapter Fitting, DN15 x DN15 Male Thd	1	ATDDMN

NO.	DESCRIPTION	QTY.	P/N
19	Pipe Nipple, 1" BSP Thd x 80 mm	1	AP80F2
20	Pipe Nipple, 1/2" BSP Thd x 60 mm	2	AP60D4
21	Pipe Nipple, 3/4" BSP Thd x 120 mm	1	AP120E4
22	Pipe Nipple, 1/2" BSP Thd x 120 mm	1	AP120D4
23	Pipe Nipple, 2" BSP Thd x 100 mm	1	AP100I2
24	Plug, 3/4" BSP Thd	1	A291E2
25	Pipe Nipple, 2" BSP Thd	1	A280I2
26	Reducing Tee, 2" x 2" x 1/2", BSP Female Thd	1	A130RIID2
27	Air Pressure Gauge, 250 PSI	1	923431012
28	Anti Flood Fitting, 3/32" Restriction	1	920321002
29	Ball Valve, DN15 with M5 Vent Hole.	2	59304FO
30	Model DPV-1 Dry Pipe Valve, Groove x Groove, DN150	1	523131960
31	Elbow WES 3 mm/M5	2	406012
32	Check Valve, DN15 Male Thd x DN15 Female Thd	1	305105
33	1/2" Self-Closing Drain Valve	1	2162156
34	Ball Valve, DN50 Thd	1	1610000600
35	Ball Valve, DN20 Thd	1	1610000270
36	Ball Valve, DN15 Thd	1	1610000210
37	Pressure Alarm Switch, PS10-1 or TPS10X1	1	0260 or 100101
38	Water Pressure Gauge, 300 PSI / 21 bar	1	025500013

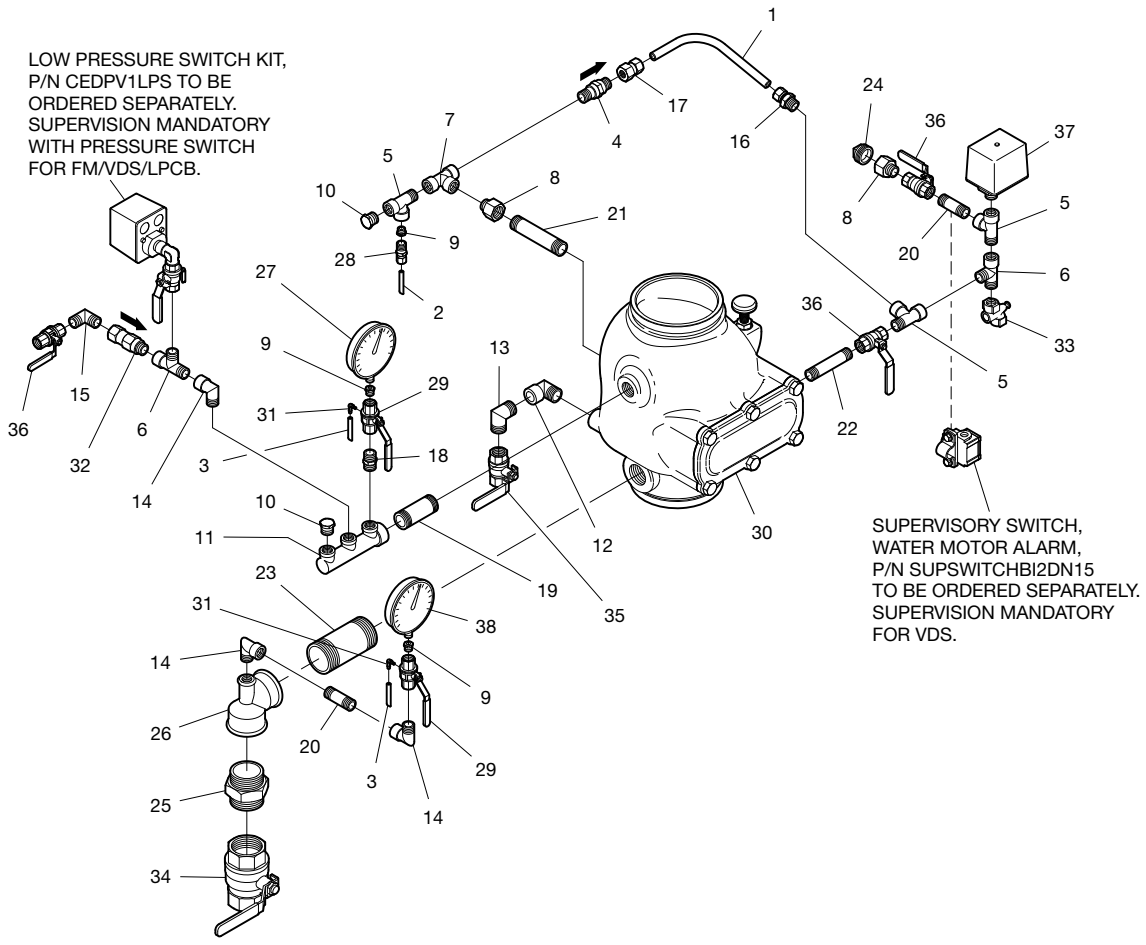

FIGURE 12
MODEL DPV-1 DRY PIPE VALVE EUROPEAN CONFORMITY TRIM
WITH STANDARD ALARM TEST VALVE
DN150

NO.	DESCRIPTION	QTY.	P/N
1	Copper Tube, 15 x 1 mm, Type D	1	WS00000086
2	Copper Tube, 15 x 1 mm, Type C	1	WS00000083
3	Copper Tube, 15 x 1 mm, Type B	1	WS00000082
4	Pressure Relief Hose, Transparent, 3 x 6 x 1.2 m	2	WS00000004
5	Adapter Tee, DN15 Male Thd x DN15 Female Thd x DN15 Female Thd	1	TTDMDDFN
6	Adapter Tee, DN15 Male Thd x DN15 Male Thd x DN15 Female Thd	2	TTDDMDFN
7	Adapter Tee, DN15 x DN15 x DN15 Female Thd	1	TTDDDFN
8	Reducer, DN20 Male Thd x DN15 Female Thd	1	RTEMDFN
9	Reducer, DN20 Female Thd x DN15 Male Thd	1	RTDMEFN
10	Adapter Reducer, DN15 Male Thd x DN8 Female Thd	2	RTDMBFN
11	Manifold, 1" BSP Female Thd, 3 x 1/2" BSP Female Thd Outlets	1	MANIF3WAY
12	Ball Valve, 3-way, 1/2" BSP	1	K00128
13	Elbow, DN20 Male Thd x DN20 Female Thd	2	ETEMEFN
14	Elbow, DN15 Male Thd x DN15 Female Thd	4	ETDMDFN
15	Adapter Elbow, DN15 Male Thd x 15 mm Compression	2	ETDMCON
16	Elbow, DN15 x DN15 Male Thd	1	ETDDMN
17	Elbow, DN15 x DN15 Female Thd	1	ETDDFN
18	Adapter Fitting, DN15 Male Thd x 15 mm Compression	3	ATDMCON
19	Adapter Fitting, DN15 Female Thd x 15 mm Compression	1	ATDFCON
20	Adapter Fitting, DN15 x DN15 Male Thd	3	ATDDMN
21	Pipe Nipple, DN65 Valve, 1" BSP Thd x 90 mm	1	AP90F2
	Pipe Nipple, DN80 Valve, 1" BSP Thd x 80 mm	1	AP80F2

NO.	DESCRIPTION	QTY.	P/N
22	Pipe Nipple, DN65 Valve, 1/2" BSP Thd x 100 mm	1	AP100D4
	Pipe Nipple, DN80 Valve, 1/2" BSP Thd x 80 mm	1	AP80D4
23	Pipe Nipple, 1/2" BSP Thd x 60 mm	1	AP60D4
24	Pipe Nipple, 1/2" BSP Thd x 180 mm	1	AP180D4
25	Pipe Nipple, 1-1/2" BSP Thd x 150 mm	1	AP150H2
26	Pipe Nipple, 3/4" BSP Thd x 100 mm	1	AP100E4
27	Pipe Nipple, 1/2" BSP Thd x 100 mm	1	AP100D4
28	Plug, 3/4" BSP Thd	1	A291E2
29	Pipe Nipple, 1-1/2" BSP Thd	1	A280H2
30	Reducing Tee, 1-1/2" x 1-1/2" x 1/2", BSP Female Thd	1	A130RHHD2
31	Air Pressure Gauge, 250 PSI	2	923431012
32	Ball Valve, DN15 with M5 Vent Hole	2	59304FO
33	Model ACC-1 Dry Pipe Valve Accelerator	1	523111001
34	Model DPV-1 Dry Pipe Valve, Groove x Groove DN65 Valve	1	523131925
	DN80 Valve	1	523131930
35	Elbow WES 3 mm/M5	2	406012
36	Check Valve, DN15 Male Thd x DN15 Female Thd	1	305105
37	1/2" Self-Closing Drain Valve	1	2162156
38	Ball Valve, DN40 Thd	1	1610000480
39	Ball Valve, DN20 Thd	1	1610000270
40	Ball Valve, DN15 Thd	2	1610000210
41	Pressure Alarm Switch, PS10-1 or TPS10X1	1	0260 or 100101
42	Water Pressure Gauge, 300 PSI / 21 bar	1	025500013

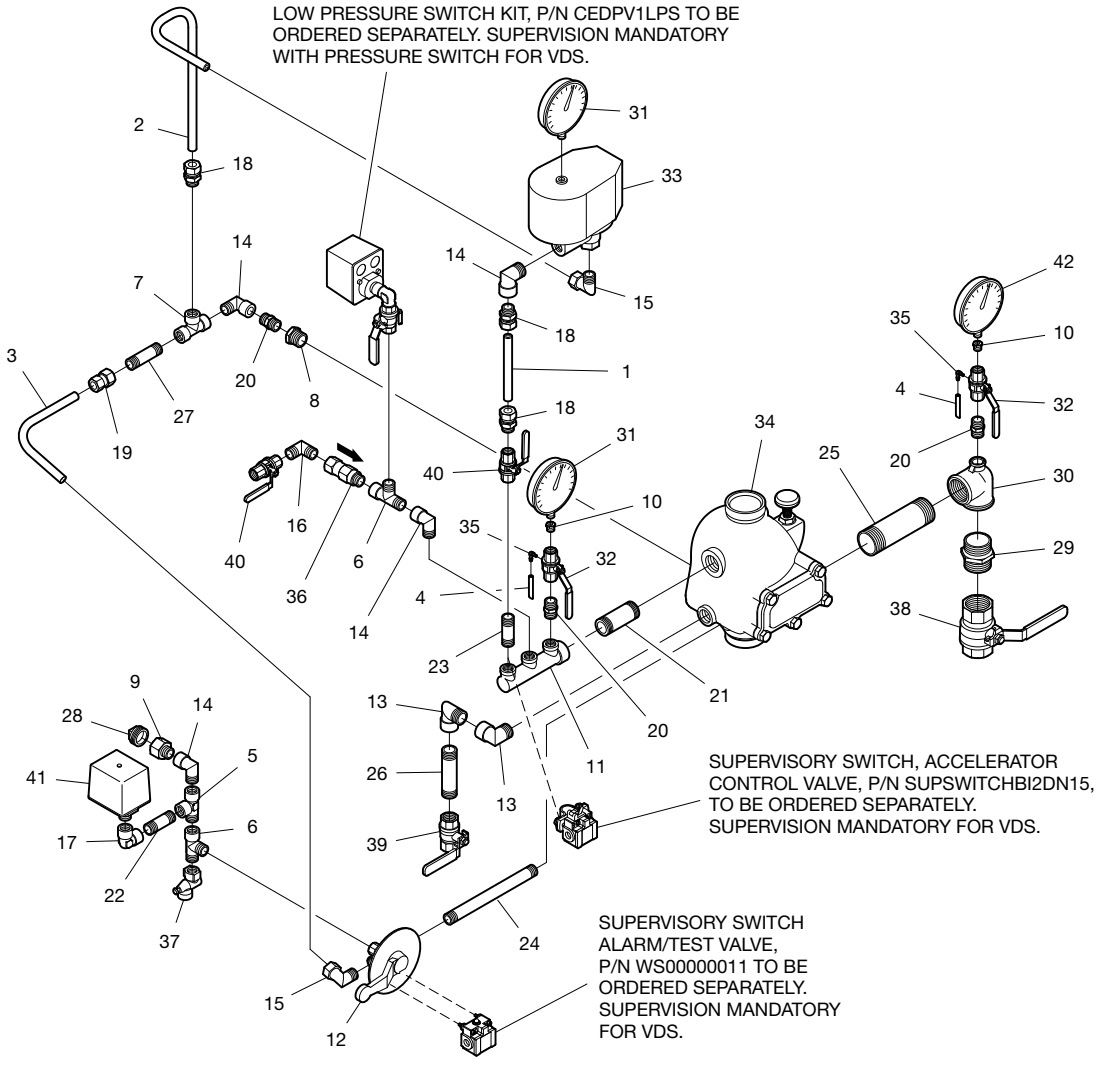

FIGURE 13
MODEL DPV-1 DRY PIPE VALVE EUROPEAN CONFORMITY TRIM WITH THREE-WAY ALARM TEST VALVE AND MODEL ACC-1 ACCELERATOR DN65 AND DN80

NO.	DESCRIPTION	QTY.	P/N
1	Copper Tube, 15 x 1 mm, Type D	1	WS00000086
2	Copper Tube, 15 x 1 mm, Type C	1	WS00000083
3	Copper Tube, 15 x 1 mm, Type B	1	WS00000082
4	Pressure Relief Hose, Transparent, 3 x 6 x 1.2 m	2	WS00000004
5	Adapter Tee, DN15 Male Thd x DN15 Female Thd x DN15 Female Thd.	1	TTDMDDFN
6	Adapter Tee, DN15 Male Thd x DN15 Male Thd x DN15 Female Thd.	2	TTDDMDFN
7	Adapter Tee, DN15 x DN15 x DN15 Female Thd	1	TTDDDFN
8	Reducer, DN20 Male Thd x DN15 Female Thd	1	RTEMDFN
9	Reducer, DN20 Female Thd x DN15 Male Thd	1	RTDMEFN
10	Adapter Reducer, DN15 Male Thd x DN8 Female Thd	2	RTDMBFN
11	Manifold, 1" BSP Female Thd, 3 x 1/2" BSP Female Thd Outlets	1	MANIF3WAY
12	Ball Valve, 3-way, 1/2" BSP	1	K00128
13	Elbow, DN20 Male Thd x DN20 Female Thd	2	ETEMEFN
14	Elbow, DN15 Male Thd x DN15 Female Thd	4	ETDMDFN
15	Adapter Elbow, DN15 Male Thd x 15 mm Compression	2	ETDMCON
16	Elbow, DN15 x DN15 Male Thd	1	ETDDMN
17	Elbow, DN15 x DN15 Female Thd	1	ETDDFN
18	Adapter Fitting, DN15 Male Thd x 15 mm Compression	3	ATDMCON
19	Adapter Fitting, DN15 Female Thd x 15 mm Compression	1	ATDFCON
20	Adapter Fitting, DN15 x DN15 Male Thd	3	ATDDMN

NO.	DESCRIPTION	QTY.	P/N
21	Pipe Nipple, 1" BSP Thd x 80 mm	1	AP80F2
22	Pipe Nipple, 1/2" BSP Thd x 60 mm	2	AP60D4
23	Pipe Nipple, 1/2" BSP Thd x 180 mm	1	AP180D4
24	Pipe Nipple, 2" BSP Thd x 120 mm	1	AP120I2
25	Pipe Nipple, 3/4" BSP Thd x 100 mm	1	AP100E4
26	Pipe Nipple, 1/2" BSP Thd x 100 mm	1	AP100D4
27	Plug, 3/4" BSP Thd	1	A291E2
28	Pipe Nipple, 2" BSP Thd	1	A280I2
29	Reducing Tee, 2" x 2" x 1/2", BSP Female Thd	1	A130RIID2
30	Air Pressure Gauge, 250 PSI	2	923431012
31	Ball Valve, DN15 with M5 Vent Hole	2	59304FO
32	Model ACC-1 Dry Pipe Valve Accelerator	1	523111001
33	Model DPV-1 Dry Pipe Valve, Groove x Groove, DN100	1	523131940
34	Elbow WES 3 mm/M5	2	406012
35	Check Valve, DN15 Male Thd x DN15 Female Thd	1	305105
36	1/2" Self-Closing Drain Valve	1	2162156
37	Ball Valve, DN50 Thd	1	1610000600
38	Ball Valve, DN20 Thd	1	1610000270
39	Ball Valve, DN15 Thd	2	1610000210
40	Pressure Alarm Switch, PS10-1 or TPS10X1	1	0260 or 100101
41	Water Pressure Gauge, 300 PSI / 21 bar	1	025500013

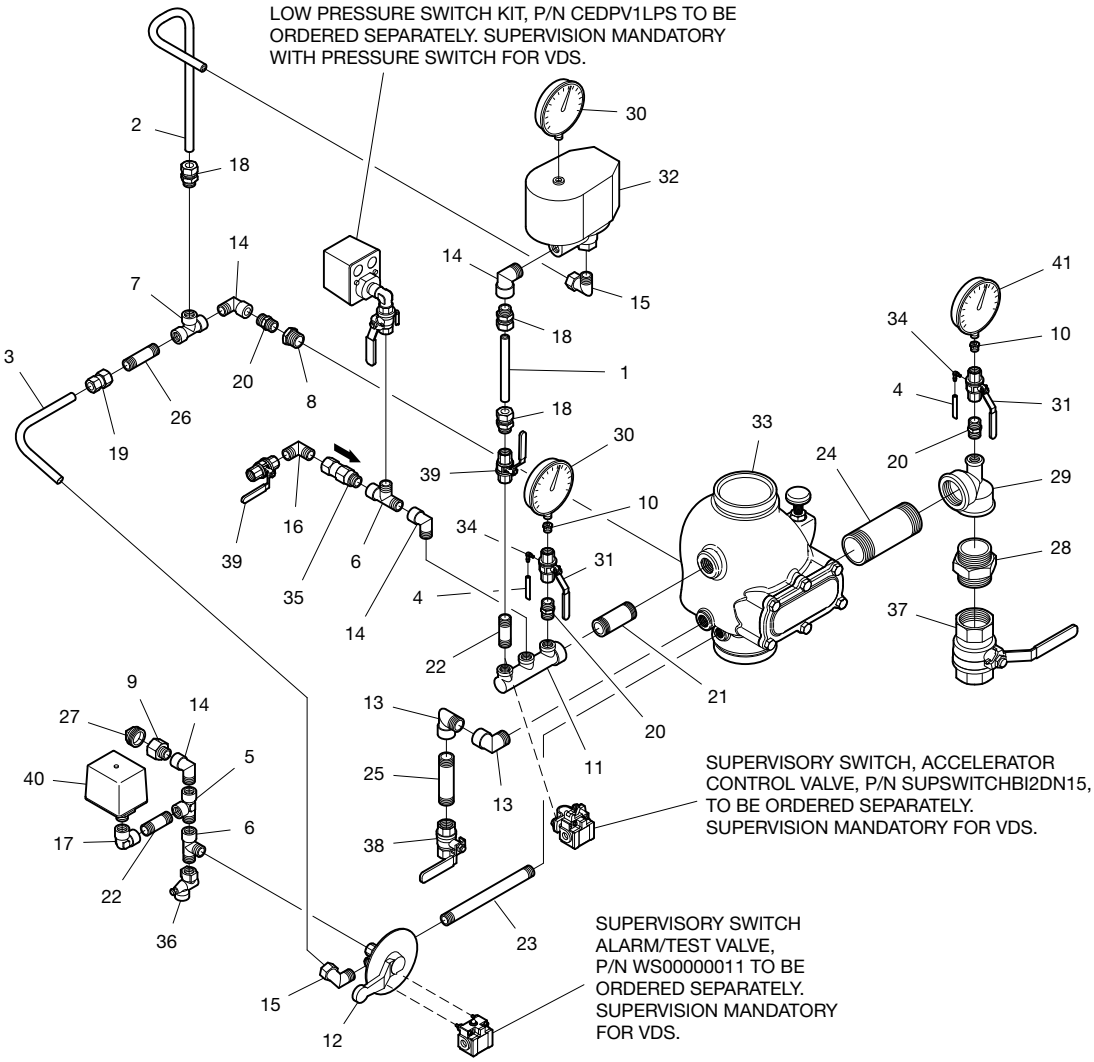

FIGURE 14
MODEL DPV-1 DRY PIPE VALVE EUROPEAN CONFORMITY TRIM WITH THREE-WAY ALARM TEST VALVE AND MODEL ACC-1 ACCELERATOR DN100

NO.	DESCRIPTION	QTY.	P/N
1	Ball Valve, 3-way, 1/2" BSP	1	WS00000095
2	Copper Tube, 15 x 1 mm, Type B	1	WS00000088
3	Copper Tube, 15 x 1 mm, Type C	1	WS00000087
4	Copper Tube, 15 x 1 mm, Type D	1	WS00000086
5	Pressure Relief Hose, Transparent, 3 x 6 x 1.2 m	2	WS00000004
6	Adapter Tee, DN15 Male Thd x DN15 Male Thd x DN15 Female Thd	2	TTDDMDFN
7	Adapter Tee, DN15 x DN15 x DN15 Female Thd	2	TTDDDFN
8	Reducer, DN20 Female Thd x DN15 Male Thd	2	RTDMEFN
9	Adapter Reducer, DN15 Male Thd x DN8 Female Thd	2	RTDMBFN
10	Manifold, 1" BSP Female Thd, 3 x 1/2" BSP Female Thd Outlets	1	MANIF3WAY
11	Elbow, DN20 Male Thd x DN20 Female Thd	1	ETEMEFN
12	Elbow, DN20 Male Thd x DN20 Male Thd	1	ETEEMN
13	Elbow, DN15 Male Thd x DN15 Female Thd	4	ETDMDFN
14	Adapter Elbow, DN15 Male Thd x 15 mm Compression	2	ETDMCON
15	Elbow, DN15 x DN15 Male Thd	1	ETDDMN
16	Adapter Fitting, DN15 Male Thd x 15 mm Compression	3	ATDMCON
17	Adapter Fitting, DN15 Female Thd x 15 mm Compression	1	ATDFCON
18	Adapter Fitting, DN15 x DN15 Male Thd	2	ATDDMN
19	Pipe Nipple, 1" BSP Thd x 80 mm	1	AP80F2

NO.	DESCRIPTION	QTY.	P/N
20	Pipe Nipple, 1/2" BSP Thd x 60 mm	2	AP60D4
21	Pipe Nipple, 1/2" BSP Thd x 180 mm	1	AP180D4
22	Pipe Nipple, 3/4" BSP Thd x 120 mm	1	AP120E4
23	Pipe Nipple, 2" BSP Thd x 100 mm	1	AP100I2
24	Pipe Nipple, 1/2" BSP Thd x 100 mm	1	AP100D4
25	Plug, 3/4" BSP Thd	1	A291E2
26	Pipe Nipple, 2" BSP Thd	1	A280I2
27	Reducing Tee, 2" x 2" x 1/2", BSP Female Thd	1	A130RIID2
28	Air Pressure Gauge, 250 PSI	2	923431012
29	Ball Valve, DN15 with M5 Vent Hole	2	59304FO
30	Model ACC-1 Dry Pipe Valve Accelerator	1	523111001
31	Model DPV-1 Dry Pipe Valve, Groove x Groove, DN150	1	523131960
32	Elbow WES 3 mm/M5	2	406012
33	Check Valve, DN15 Male Thd x DN15 Female Thd	1	305105
34	1/2" Self-Closing Drain Valve	1	2162156
35	Ball Valve, DN50 Thd	1	1610000600
36	Ball Valve, DN20 Thd	1	1610000270
37	Ball Valve, DN15 Thd	2	1610000210
38	Pressure Alarm Switch, PS10-1 or TPS10X1	1	0260 or 100101
39	Water Pressure Gauge, 300 PSI / 21 bar	1	025500013

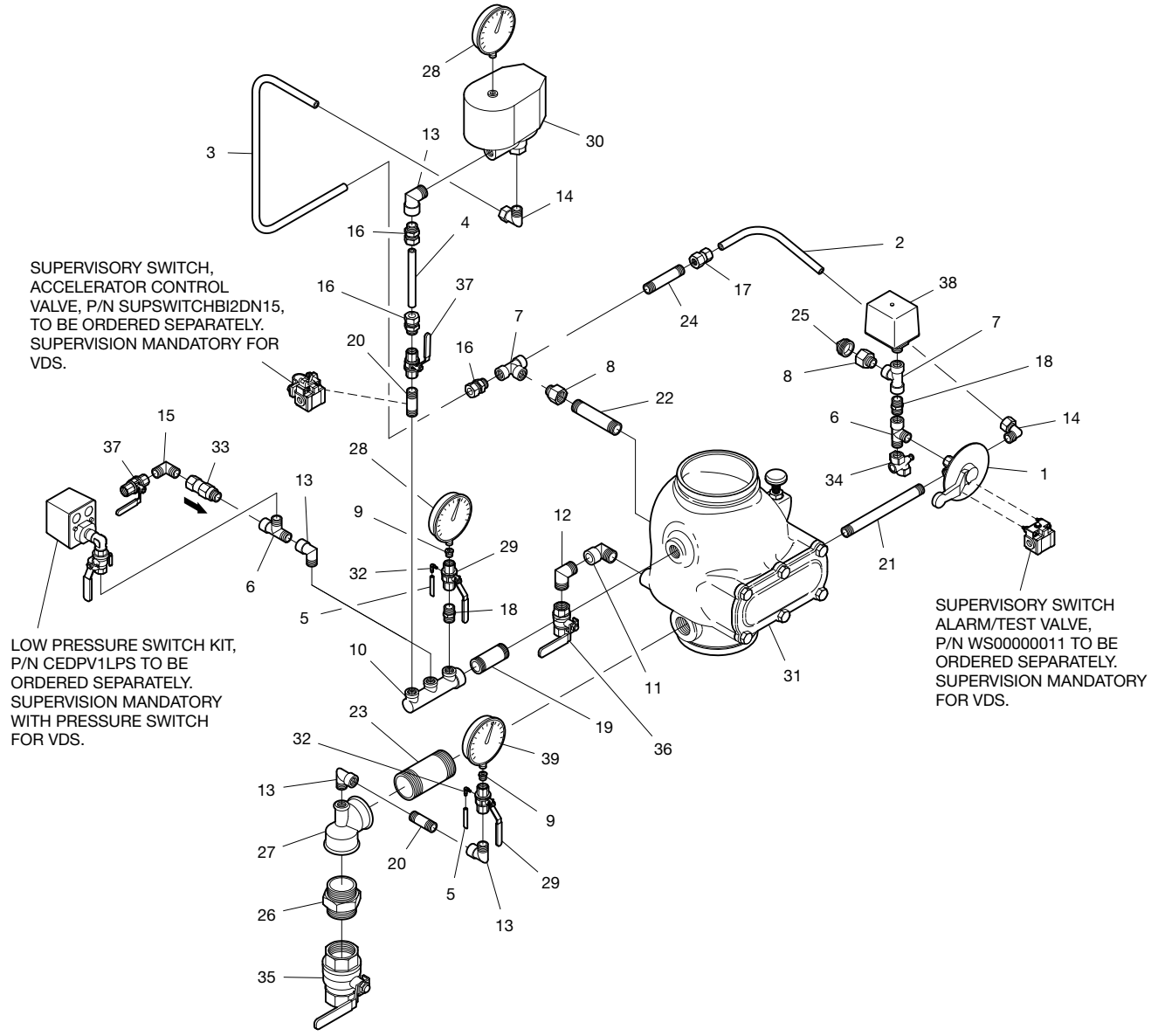

FIGURE 15
MODEL DPV-1 DRY PIPE VALVE EUROPEAN CONFORMITY TRIM WITH THREE-WAY ALARM TEST VALVE AND MODEL ACC-1 ACCELERATOR DN150

NO.	DESCRIPTION	QTY.	P/N
1	Copper Tube, 15 x 1 mm, Type D	1	WS00000086
2	Copper Tube, 15 x 1 mm, Type C	1	WS00000083
3	Copper Tube, 15 x 1 mm, Type B	1	WS00000082
4	Copper Tube, 1 mm x 1 m	1	WS00000008
5	Pressure Relief Hose, Transparent, 3 x 6 x 1.2 m	2	WS00000004
6	Spring Loaded Check Valve, 1/2" NPT	1	V923221002
7	Adapter Tee, DN15 Male Thd x DN15 Female Thd x DN15 Female Thd.	3	TTDMDDFN
8	Adapter Tee, DN15 Male Thd x DN15 Male Thd x DN15 Female Thd.	2	TTDDMDFN
9	Adapter Tee, DN15 x DN15 x DN15 Female Thd	1	TTDDDFN
10	Reducer, DN20 Male Thd x DN15 Female Thd	1	RTEMDFN
11	Reducer, DN20 Female Thd x DN15 Male Thd	1	RTDMEFN
12	Adapter Reducer, DN15 Male Thd x DN8 Female Thd	3	RTDMBFN
13	Manifold, 1" BSP Female Thd, 3 x 1/2" BSP Female Thd Outlets	1	MANIF3WAY
14	Elbow, DN20 Male Thd x DN20 Female Thd	2	ETEMEFN
15	Elbow, DN15 Male Thd x DN15 Female Thd	4	ETDMDFN
16	Adapter Elbow, DN15 Male Thd x 15 mm Compression	1	ETDMCON
17	Elbow, DN15 x DN15 Male Thd	1	ETDDMN
18	Elbow, DN15 x DN15 Female Thd	1	ETDDFN
19	Adapter Fitting, DN15 Male Thd x 15 mm Compression	4	ATDMCON
20	Adapter Fitting, DN15 Female Thd x 15 mm Compression	1	ATDFCON
21	Adapter Fitting, DN15 x DN15 Male Thd	3	ATDDMN

NO.	DESCRIPTION	QTY.	P/N
22	Pipe Nipple, DN65 Valve, 1" BSP Thd x 90 mm.	1	AP90F2
	Pipe Nipple, DN80 Valve, 1" BSP Thd x 80 mm.	1	AP80F2
23	Pipe Nipple, 1/2" BSP Thd x 60 mm	3	AP60D4
24	Pipe Nipple, 1-1/2" BSP Thd x 150 mm.	1	AP150H2
25	Pipe Nipple, 3/4" BSP Thd x 100 mm	1	AP100E4
26	Pipe Nipple, DN65 Valve, 1/2" BSP Thd x 120 mm	1	AP120D4
	Pipe Nipple, DN80 Valve, 1/2" BSP Thd x 100 mm	1	AP100D4
27	Plug, 3/4" BSP Thd	1	A291E2
28	Pipe Nipple, 1-1/2" BSP Thd	1	A280H2
29	Reducing Tee, 1-1/2" x 1-1/2" x 1/2" BSP Female Thd.	1	A130RHHD2
30	Air Pressure Gauge, 250 PSI	2	923431012
31	Anti Flood Fitting, 3/32" Restriction	1	920321002
32	Ball Valve, DN15 with M5 Vent Hole.	2	59304FO
33	Model ACC-1 Dry Pipe Valve Accelerator	1	523111001
34	Model DPV-1 Dry Pipe Valve, Groove x Groove DN65 Valve	1	523131925
	DN80 Valve	1	523131930
35	Elbow WES 3 mm/M5	2	406012
36	Check Valve, DN15 Male Thd x DN15 Female Thd	1	305105
37	1/2" Self-Closing Drain Valve	1	2162156
38	Ball Valve, DN40 Thd	1	1610000480
39	Ball Valve, DN20 Thd	1	1610000270
40	Ball Valve, DN15 Thd	4	1610000210
41	Pressure Alarm Switch, PS10-1 or TPS10X1	1	0260 or 100101
42	Water Pressure Gauge, 300 PSI / 21 bar	1	025500013

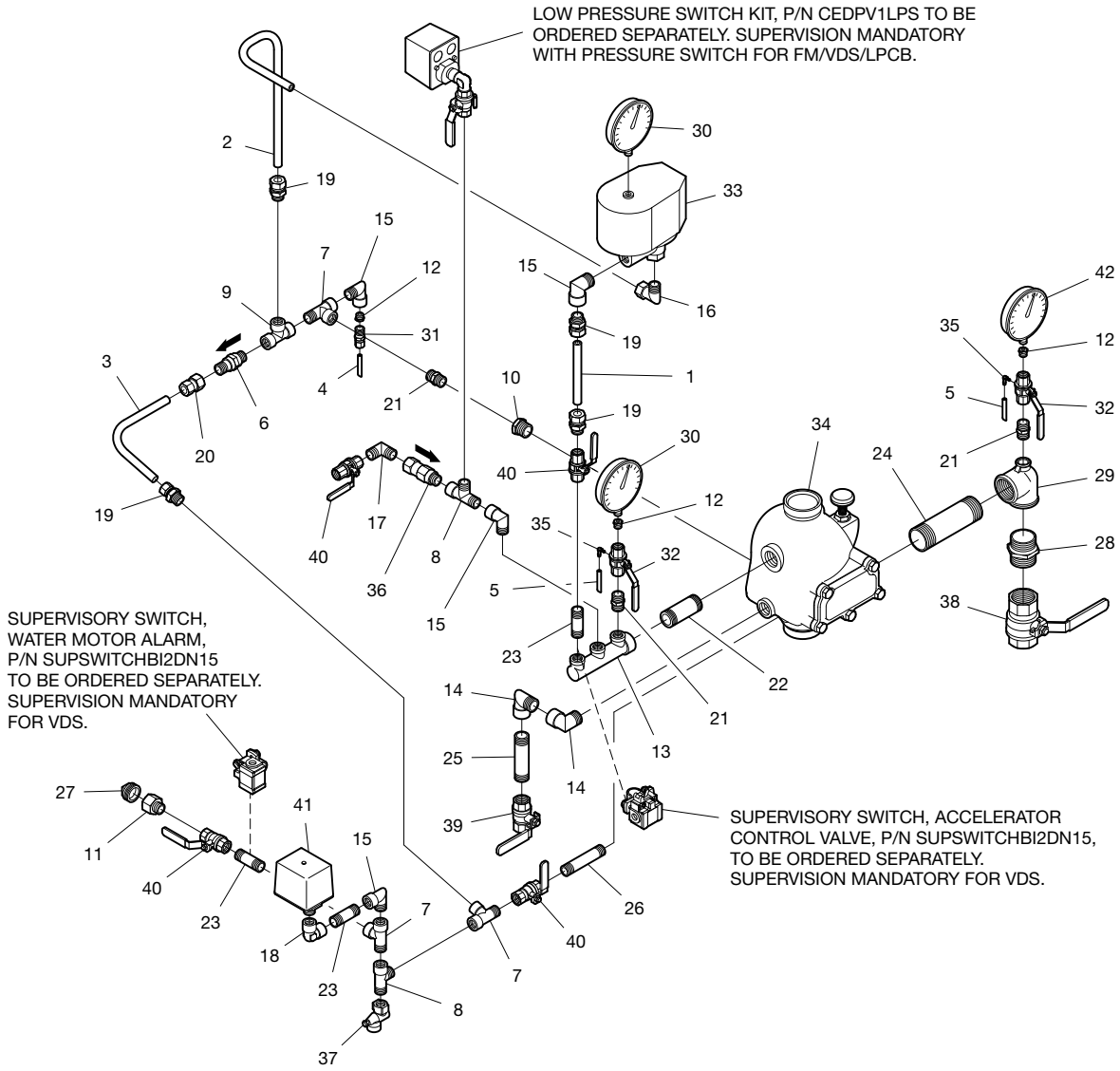

FIGURE 16
MODEL DPV-1 DRY PIPE VALVE EUROPEAN CONFORMITY TRIM WITH STANDARD ALARM TEST VALVE AND MODEL ACC-1 ACCELERATOR DN65 AND DN80

NO.	DESCRIPTION	QTY.	P/N
1	Copper Tube, 15 x 1 mm, Type D	1	WS00000086
2	Copper Tube, 15 x 1 mm, Type C	1	WS00000083
3	Copper Tube, 15 x 1 mm, Type B	1	WS00000082
4	Copper Tube, 1 mm x 1 m	1	WS00000008
5	Pressure Relief Hose, Transparent, 3 x 6 x 1.2 m	2	WS00000004
6	Spring Loaded Check Valve, 1/2" NPT	1	V923221002
7	Adapter Tee, DN15 Male Thd x DN15 Female Thd x DN15 Female Thd.	3	TTDMDDFN
8	Adapter Tee, DN15 Male Thd x DN15 Male Td x DN15 Female Thd.	2	TTDDMDFN
9	Adapter Tee, DN15 x DN15 x DN15 Female Thd	1	TTDDDFN
10	Reducer, DN20 Male Thd x DN15 Female Thd	1	RTEMDFN
11	Reducer, DN20 Female Thd x DN15 Male Thd	1	RTDMEFN
12	Adapter Reducer, DN15 Male Thd x DN8 Female Thd	3	RTDMBFN
13	Plug, DN15 Female Thd	1	PCTDN
14	Manifold, 1" BSP Female Thd, 3 x 1/2" BSP Female Thd Outlets	1	MANIF3WAY
15	Elbow, DN20 Male Thd x DN20 Female Thd	2	ETEMEFN
16	Elbow, DN15 Male Thd x DN15 Female Thd	4	ETDMDFN
17	Adapter Elbow, DN15 Male Thd x 15 mm Compression	1	ETDMCON
18	Elbow, DN15 x DN15 Male Thd	1	ETDDMN
19	Elbow, DN15 x DN15 Female Thd	1	ETDDFN
20	Adapter Fitting, DN15 Male Thd x 15 mm Compression	4	ATDMCON
21	Adapter Fitting, DN15 Female Thd x 15 mm Compression	1	ATDFCON

NO.	DESCRIPTION	QTY.	P/N
22	Adapter Fitting, DN15 x DN15 Male Thd	3	ATDDMN
23	Pipe Nipple, 1" BSP Thd x 80 mm	1	AP80F2
24	Pipe Nipple, 1/2" BSP Thd x 60 mm	3	AP60D4
25	Pipe Nipple, 2" BSP Thd x 120 mm	1	AP120I2
26	Pipe Nipple, 3/4" BSP Thd x 100 mm	1	AP100E4
27	Pipe Nipple, 1/2" BSP Thd x 100 mm	1	AP100D4
28	Plug, 3/4" BSP Thd	1	A291E2
29	Pipe Nipple, 2" BSP Thd	1	A280I2
30	Reducing Tee, 2" x 2" x 1/2", BSP Female Thd	1	A130RIID2
31	Air Pressure Gauge, 250 PSI	2	923431012
32	Anti Flood Fitting, 3/32" Restriction	1	920321002
33	Ball Valve, DN15 with M5 Vent Hole.	2	59304FO
34	Model ACC-1 Dry Pipe Valve Accelerator	1	523111001
35	Model DPV-1 Dry Pipe Valve, Groove x Groove, DN100	1	523131940
36	Elbow WES 3 mm/M5	2	406012
37	Check Valve, DN15 Male Thd x DN15 Female Thd	1	305105
38	1/2" Self-Closing Drain Valve	1	2162156
39	Ball Valve, DN50 Thd	1	1610000600
40	Ball Valve, DN20 Thd	1	1610000270
41	Ball Valve, DN15 Thd	4	1610000210
42	Pressure Alarm Switch, PS10-1 or TPS10X1	1	0260 or 100101
43	Water Pressure Gauge, 300 PSI / 21 bar	1	025500013

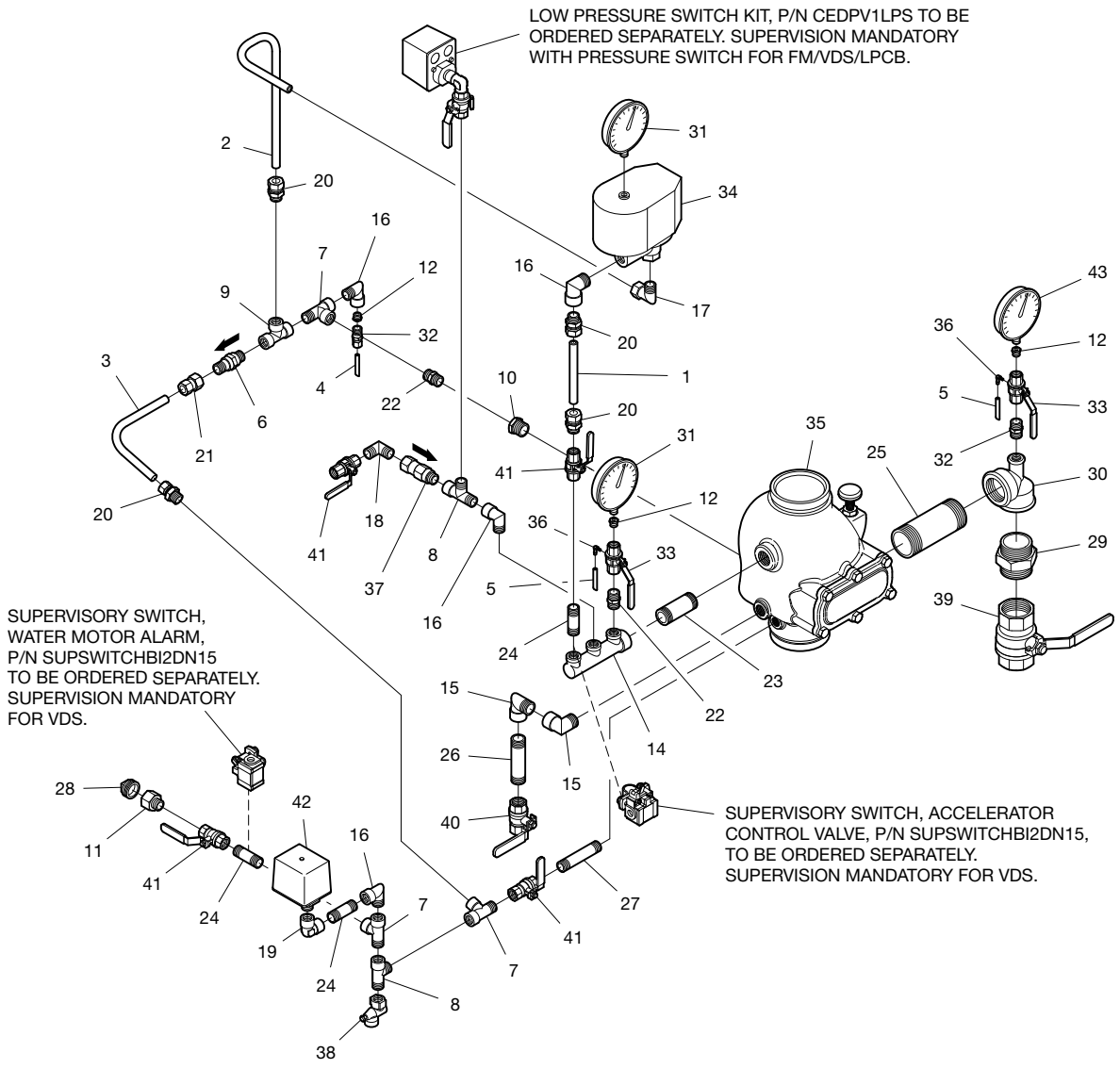

FIGURE 17
MODEL DPV-1 DRY PIPE VALVE EUROPEAN CONFORMITY TRIM WITH STANDARD ALARM TEST VALVE AND MODEL ACC-1 ACCELERATOR DN100

NO.	DESCRIPTION	QTY.	P/N
1	Copper Tube, 15 x 1 mm, Type B	1	WS00000088
2	Copper Tube, 15 x 1 mm, Type C	1	WS00000087
3	Copper Tube, 15 x 1 mm, Type D	1	WS00000086
4	Copper Tube, 1 mm x 1 m	1	WS00000008
5	Pressure Relief Hose, Transparent, 3 x 6 x 1.2 m	2	WS00000004
6	Spring Loaded Check Valve, 1/2" NPT	1	V923221002
7	Adapter Tee, DN15 Male Thd x DN15 Female Thd x DN15 Female Thd.	3	TTDMDDFN
8	Adapter Tee, DN15 Male Thd x DN15 Male Thd x DN15 Female Thd.	2	TTDDMDFN
9	Adapter Tee, DN15 x DN15 x DN15 Female Thd	1	TTDDDFN
10	Reducer, DN20 Female Thd x DN15 Male Thd	2	RTDMEFN
11	Adapter Reducer, DN15 Male Thd x DN8 Female Thd	3	RTDMBFN
12	Manifold, 1" BSP Female Thd, 3 x 1/2" BSP Female Thd Outlets	1	MANIF3WAY
13	Elbow, DN20 Male Thd x DN20 Female Thd	1	ETEMEFN
14	Elbow, DN20 Male Thd x DN20 Male Thd	1	ETEEMN
15	Elbow, DN15 Male Thd x DN15 Female Thd	4	ETDMDFN
16	Adapter Elbow, DN15 Male Thd x 15 mm Compression	1	ETDMCON
17	Elbow, DN15 x DN15 Male Thd	1	ETDDMN
18	Adapter Fitting, DN15 Male Thd x 15 mm Compression	4	ATDMCON
19	Adapter Fitting, DN15 Female Thd x 15 mm Compression	1	ATDFCON

NO.	DESCRIPTION	QTY.	P/N
20	Adapter Fitting, DN15 x DN15 Male Thd	1	ATDDMN
21	Pipe Nipple, 1" BSP Thd x 80 mm	1	AP80F2
22	Pipe Nipple, 1/2" BSP Thd x 60 mm	3	AP60D4
23	Pipe Nipple, 3/4" BSP Thd x 120 mm	1	AP120E4
24	Pipe Nipple, 1/2" BSP Thd x 120 mm	1	AP120D4
25	Pipe Nipple, 2" BSP Thd x 100 mm	1	AP100I2
26	Plug, 3/4" BSP Thd	1	A291E2
27	Pipe Nipple, 2" BSP Thd	1	A280I2
28	Reducing Tee, 2" x 2" x 1/2", BSP Female Thd	1	A130RIID2
29	Air Pressure Gauge, 250 PSI	2	923431012
30	Anti Flood Fitting, 3/32" Restriction	1	920321002
31	Ball Valve, DN15 with M5 Vent Hole	2	59304FO
32	Model ACC-1 Dry Pipe Valve Accelerator	1	523111001
33	Model DPV-1 Dry Pipe Valve, Groove x Groove, DN150	1	523131960
34	Elbow WES 3 mm/M5	2	406012
35	Check Valve, DN15 Male Thd x DN15 Female Thd	1	305105
36	1/2" Self-Closing Drain Valve	1	2162156
37	Ball Valve, DN50 Thd	1	1610000600
38	Ball Valve, DN20 Thd	1	1610000270
39	Ball Valve, DN15 Thd	4	1610000210
40	Pressure Alarm Switch, PS10-1 or TPS10X1	1	0260 or 100101
41	Water Pressure Gauge, 300 PSI / 21 bar	1	025500013

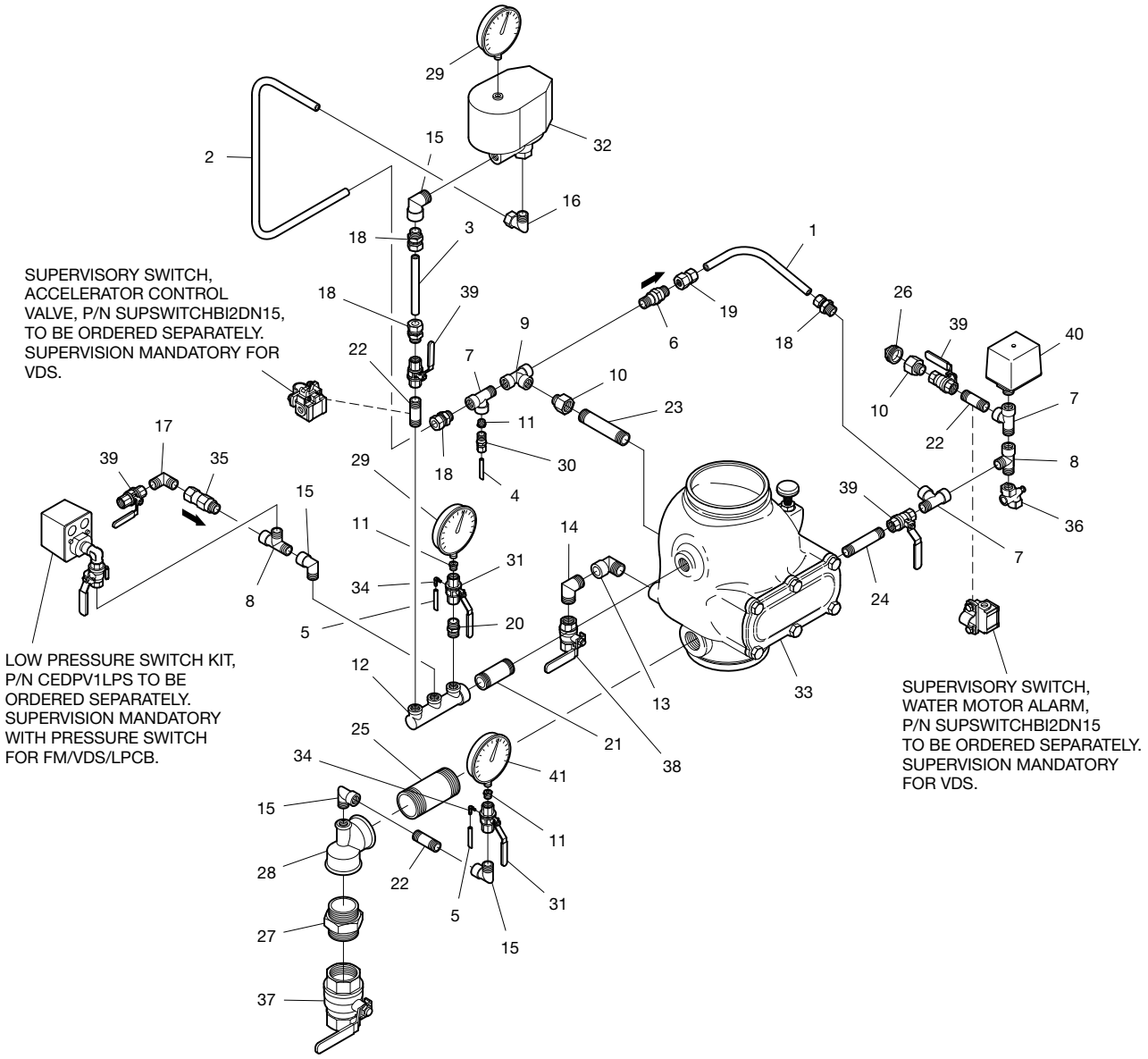

FIGURE 18
MODEL DPV-1 DRY PIPE VALVE EUROPEAN CONFORMITY TRIM WITH STANDARD ALARM TEST VALVE AND MODEL ACC-1 ACCELERATOR DN150

1467 Elmwood Avenue, Cranston, RI 02910 | Telephone +1-401-781-8220

© 2025 Johnson Controls. All rights reserved. All specifications and other information shown were current as of document revision date and are subject to change without notice.

NATIONAL FIRE PROTECTION ASSOCIATION and NFPA are registered trademarks of National Fire Protection Association;
TEFLON is a trademark of The Chemours Company FC, LLC

Worldwide Contacts | www.tyco-fire.com

DPV-1 Appendix Poster Printing Instructions

General Description

The appendix found at the end of this document provides valve setting and testing/inspection procedures summarized from the Care and Maintenance section.

Some jurisdictions require a copy of the Summary Instructions appendix to be displayed in proximity to a DV-5A Automatic Control Valve riser supplying a fire protection system.

Reproduce as an individual poster by printing on appropriate media.

A form of protection is recommended to prevent damage which could render the poster illegible. Conditions to avoid include moisture infiltration, fading, mutilation, etc.. Protective measures may include lamination, placement within an impact- and water-resistant frame, etc.

The format shown in this document is landscape orientation on US Tabloid size, also known as ANSI B drawing format, both roughly comparable to ISO A3 size format.

To avoid potential cropping of content when printing to A3 format, select options such as print to fit or scale to fit. Depending on printer capability content will be slightly reduced but should remain readable.

See Print Format Dimensions Table for details.

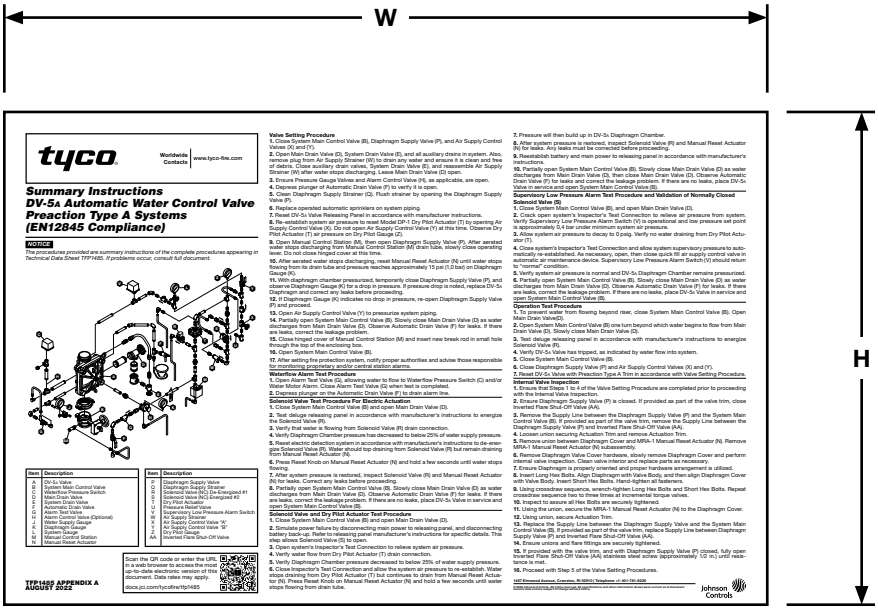

Format	Imperial in.		Metric mm	
	W	H	W	H
US Tabloid	17	11	—	—
ANSI B				
ISO A3	—	—	420	297
PRINT FORMAT DIMENSIONS				

Worldwide Contacts | www.tyco-fire.com

Summary Instructions Model DPV-1 Dry Pipe Valve Model European Conformity Valve Trim

DN65 and DN80 Valves with Three-Way Alarm Test Valve, without Model ACC-1 Accelerator

NOTICE

The procedures provided are summary instructions of the complete procedures appearing in Technical Data Sheet TFP1090. If problems occur, consult full document.

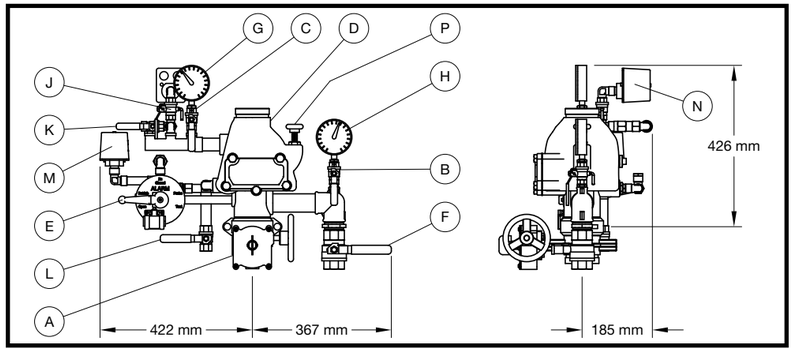

Item	Description
A	Main Control Valve
B	Pressure Gauge Valve
C	Pressure Gauge Valve
D	DPV-1 Dry Pipe Valve
E	Three-Way Alarm Control Valve
F	Main Drain Valve
G	System Air Pressure Gauge
H	Water Supply Pressure Gauge

Item	Description
J	Pressure Switch Valve
K	Air Supply Control Valve
L	Low Body Drain Valve
M	Waterflow Pressure Alarm Switch
N	Low Air Pressure Alarm Switch
P	Reset Knob

Scan the QR code or enter the URL in a web browser to access the most up-to-date electronic version of this document. Data rates may apply.

docs.jci.com/tycofire/tfp1090

I. Normal Conditions

- The Main Control Valve (A) is opened and locked.
- The sprinkler system is filled with air and is pressurized.
- The Main Drain Valve (F), and Low Body Drain Valve (L) are closed.
- The Three-Way Alarm Control Valve (E) is in the open position.
- The Pressure Gauge Valves (B) and (C) are open.
- The Pressure Switch Valve (J) is open.
- The Air Supply Control Valve (K) is open.
- System Air Pressure Gauge (G) reads downstream air pressure.
- Water Supply Pressure Gauge (H) reads the upstream water pressure.

II. Operation

When one or more sprinklers are activated, air pressure is reduced downstream of the Dry Pipe Valve. When the air pressure is sufficiently reduced, the water pressure overcomes the differential holding the Dry Pipe Valve closed and the Dry Pipe Valve opens to permit water flow into the system piping and to be discharged from any open sprinklers. Also, with the Dry Pipe Valve open, water flows through the Alarm Port at the rear of the Dry Pipe Valve to actuate the Waterflow Pressure Alarm Switch (M) and, as applicable, the Water Motor Alarm.

III. Removing System From Service

Step 1. Close the Main Control Valve (A), close the Air Supply Control Valve (K), and place the Three-Way Alarm Control Valve (E) in the closed position.

Step 2. Drain the system with the Main Drain Valve (F) and by opening all auxiliary drain valves in the system to make sure that cross-mains and branch lines are drained.

IV. Placing the System Back in Service

Step 1. Close the auxiliary drain valves after water ceases to discharge, and leave the Main Drain Valve (F) open.

Step 2. Place the Three-Way Alarm Control Valve (E) in the open position.

Step 3. Replace the sprinklers that have operated and the sprinklers close to the fire.

Step 4. Push down on the Reset Knob (P) to allow the Dry Pipe Valve (D) to re-seat.

Step 5. Via the Air Supply Control Valve (K), pressurize the system with air to 0,7 bar, and then open and close each auxiliary drain valves in the system piping to drain any remaining water in trapped sections. Also, partially open the Low Body Drain Valve (L) to assure that the riser is completely drained. Close the Low Body Drain Valve (L) as soon as water ceases to discharge.

Step 6. Open the Air Supply Control Valve (K) to restore the system to the normal system air pressure.

Step 7. Partially open the Main Control Valve (A), and then slowly close the Main Drain Valve (F).

Step 8. Fully open the Main Control Valve (A) and lock it open.

Step 9. Reset the fire alarm panel and notify the central alarm station.

V. Weekly Test

Important: Prior to closing any valves or activating any alarms, notify local security guards and the central alarm station if applicable.

Step 1. Place the Three-Way Alarm Control Valve (E) in the test position, verify that the alarm signal created by the Waterflow Pressure Alarm Switch (M) is visible at the fire panel. If applicable, check the sound of the Water Motor Alarm — it must be clear and steady.

Step 2. Place the Three-Way Alarm Control Valve (E) in the open position and verify that the normal supply and system pressures are restored. If the supply pressure is below the normal, use the instructions from the water supply to obtain the usual pressure.

Step 3. Close the Pressure Switch Valve (J) and verify operation of the Low Air Pressure Alarm Switch (N).

Step 4. Return the Pressure Switch Valve (J) to the normally open position after verifying that the alarm signal is visible at the fire panel.

APPENDIX A
OCTOBER 2025

1467 Elmwood Avenue, Cranston, RI 02910 | Telephone +1-401-781-8220

© 2025 Johnson Controls. All rights reserved. All specifications and other information shown were current as of document revision date and are subject to change without notice.

Johnson Controls

Worldwide Contacts | www.tyco-fire.com

Summary Instructions Model DPV-1 Dry Pipe Valve Model European Conformity Valve Trim

DN100 Valve with Three-Way Alarm Test Valve, without Model ACC-1 Accelerator

NOTICE

The procedures provided are summary instructions of the complete procedures appearing in Technical Data Sheet TFP1090. If problems occur, consult full document.

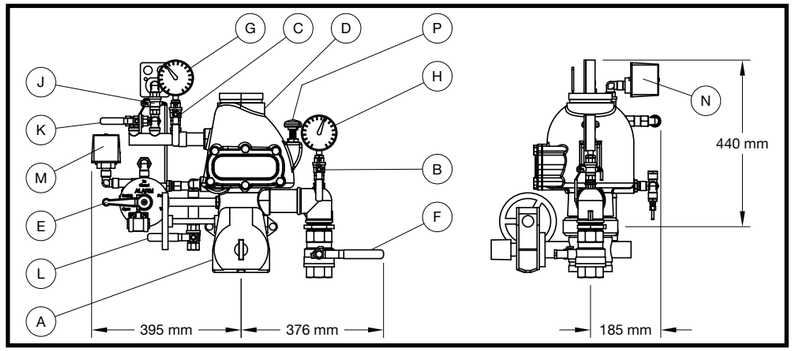

Item	Description
A	Main Control Valve
B	Pressure Gauge Valve
C	Pressure Gauge Valve
D	DPV-1 Dry Pipe Valve
E	Three-Way Alarm Control Valve
F	Main Drain Valve
G	System Air Pressure Gauge
H	Water Supply Pressure Gauge

Item	Description
J	Pressure Switch Valve
K	Air Supply Control Valve
L	Low Body Drain Valve
M	Waterflow Pressure Alarm Switch
N	Low Air Pressure Alarm Switch
P	Reset Knob

Scan the QR code or enter the URL in a web browser to access the most up-to-date electronic version of this document. Data rates may apply.

docs.jci.com/tycofire/tfp1090

I. Normal Conditions

- The Main Control Valve (A) is opened and locked.
- The sprinkler system is filled with air and is pressurized.
- The Main Drain Valve (F), and Low Body Drain Valve (L) are closed.
- The Three-Way Alarm Control Valve (E) is in the open position.
- The Pressure Gauge Valves (B) and (C) are open.
- The Pressure Switch Valve (J) is open.
- The Air Supply Control Valve (K) is open.
- System Air Pressure Gauge (G) reads downstream air pressure.
- Water Supply Pressure Gauge (H) reads the upstream water pressure.

II. Operation

When one or more sprinklers are activated, air pressure is reduced downstream of the Dry Pipe Valve. When the air pressure is sufficiently reduced, the water pressure overcomes the differential holding the Dry Pipe Valve closed and the Dry Pipe Valve opens to permit water flow into the system piping and to be discharged from any open sprinklers. Also, with the Dry Pipe Valve open, water flows through the Alarm Port at the rear of the Dry Pipe Valve to actuate the Waterflow Pressure Alarm Switch (M) and, as applicable, the Water Motor Alarm.

III. Removing System From Service

Step 1. Close the Main Control Valve (A), close the Air Supply Control Valve (K), and place the Three-Way Alarm Control Valve (E) in the closed position.

Step 2. Drain the system with the Main Drain Valve (F) and by opening all auxiliary drain valves in the system to make sure that cross-mains and branch lines are drained.

IV. Placing the System Back in Service

Step 1. Close the auxiliary drain valves after water ceases to discharge, and leave the Main Drain Valve (F) open.

Step 2. Place the Three-Way Alarm Control Valve (E) in the open position.

Step 3. Replace the sprinklers that have operated and the sprinklers close to the fire.

Step 4. Push down on the Reset Knob (P) to allow the Dry Pipe Valve (D) to re-seat.

Step 5. Via the Air Supply Control Valve (K), pressurize the system with air to 0,7 bar, and then open and close each auxiliary drain valves in the system piping to drain any remaining water in trapped sections. Also, partially open the Low Body Drain Valve (L) to assure that the riser is completely drained. Close the Low Body Drain Valve (L) as soon as water ceases to discharge.

Step 6. Open the Air Supply Control Valve (K) to restore the system to the normal system air pressure.

Step 7. Partially open the Main Control Valve (A), and then slowly close the Main Drain Valve (F).

Step 8. Fully open the Main Control Valve (A) and lock it open.

Step 9. Reset the fire alarm panel and notify the central alarm station.

V. Weekly Test

Important: Prior to closing any valves or activating any alarms, notify local security guards and the central alarm station if applicable.

Step 1. Place the Three-Way Alarm Control Valve (E) in the test position, verify that the alarm signal created by the Waterflow Pressure Alarm Switch (M) is visible at the fire panel. If applicable, check the sound of the Water Motor Alarm — it must be clear and steady.

Step 2. Place the Three-Way Alarm Control Valve (E) in the open position and verify that the normal supply and system pressures are restored. If the supply pressure is below the normal, use the instructions from the water supply to obtain the usual pressure.

Step 3. Close the Pressure Switch Valve (J) and verify operation of the Low Air Pressure Alarm Switch (N).

Step 4. Return the Pressure Switch Valve (J) to the normally open position after verifying that the alarm signal is visible at the fire panel.

APPENDIX B
OCTOBER 2025

1467 Elmwood Avenue, Cranston, RI 02910 | Telephone +1-401-781-8220

© 2025 Johnson Controls. All rights reserved. All specifications and other information shown were current as of document revision date and are subject to change without notice.

Johnson Controls

Worldwide Contacts | www.tyco-fire.com

Summary Instructions Model DPV-1 Dry Pipe Valve Model European Conformity Valve Trim

DN150 Valve with Three-Way Alarm Test Valve, without Model ACC-1 Accelerator

NOTICE

The procedures provided are summary instructions of the complete procedures appearing in Technical Data Sheet TFP1090. If problems occur, consult full document.

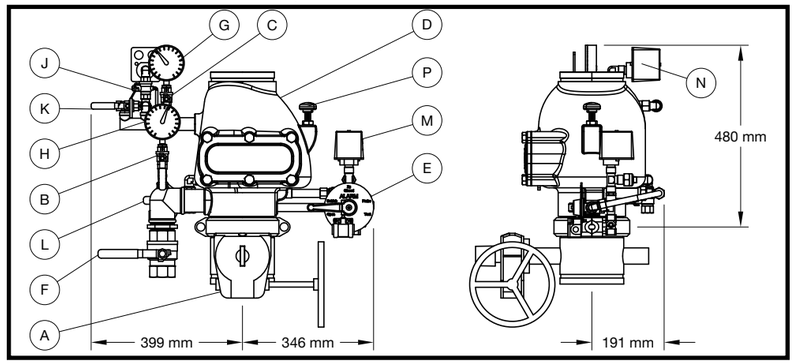

Item	Description
A	Main Control Valve
B	Pressure Gauge Valve
C	Pressure Gauge Valve
D	DPV-1 Dry Pipe Valve
E	Three-Way Alarm Control Valve
F	Main Drain Valve
G	System Air Pressure Gauge
H	Water Supply Pressure Gauge

Item	Description
J	Pressure Switch Valve
K	Air Supply Control Valve
L	Low Body Drain Valve
M	Waterflow Pressure Alarm Switch
N	Low Air Pressure Alarm Switch
P	Reset Knob

I. Normal Conditions

- The Main Control Valve (A) is opened and locked.
- The sprinkler system is filled with air and is pressurized.
- The Main Drain Valve (F), and Low Body Drain Valve (L) are closed.
- The Three-Way Alarm Control Valve (E) is in the open position.
- The Pressure Gauge Valves (B) and (C) are open.
- The Pressure Switch Valve (J) is open.
- The Air Supply Control Valve (K) is open.
- System Air Pressure Gauge (G) reads downstream air pressure.
- Water Supply Pressure Gauge (H) reads the upstream water pressure.

II. Operation

When one or more sprinklers are activated, air pressure is reduced downstream of the Dry Pipe Valve. When the air pressure is sufficiently reduced, the water pressure overcomes the differential holding the Dry Pipe Valve closed and the Dry Pipe Valve opens to permit water flow into the system piping and to be discharged from any open sprinklers. Also, with the Dry Pipe Valve open, water flows through the Alarm Port at the rear of the Dry Pipe Valve to actuate the Waterflow Pressure Alarm Switch (M) and, as applicable, the Water Motor Alarm.

III. Removing System From Service

Step 1. Close the Main Control Valve (A), close the Air Supply Control Valve (K), and place the Three-Way Alarm Control Valve (E) in the closed position.

Step 2. Drain the system with the Main Drain Valve (F) and by opening all auxiliary drain valves in the system to make sure that cross-mains and branch lines are drained.

IV. Placing the System Back in Service

Step 1. Close the auxiliary drain valves after water ceases to discharge, and leave the Main Drain Valve (F) open.

Step 2. Place the Three-Way Alarm Control Valve (E) in the open position.

Step 3. Replace the sprinklers that have operated and the sprinklers close to the fire.

Step 4. Push down on the Reset Knob (P) to allow the Dry Pipe Valve (D) to re-seat.

Step 5. Via the Air Supply Control Valve (K), pressurize the system with air to 0,7 bar, and then open and close each auxiliary drain valves in the system piping to drain any remaining water in trapped sections. Also, partially open the Low Body Drain Valve (L) to assure that the riser is completely drained. Close the Low Body Drain Valve (L) as soon as water ceases to discharge.

Step 6. Open the Air Supply Control Valve (K) to restore the system to the normal system air pressure.

Step 7. Partially open the Main Control Valve (A), and then slowly close the Main Drain Valve (F).

Step 8. Fully open the Main Control Valve (A) and lock it open.

Step 9. Reset the fire alarm panel and notify the central alarm station.

V. Weekly Test

Important: Prior to closing any valves or activating any alarms, notify local security guards and the central alarm station if applicable.

Step 1. Place the Three-Way Alarm Control Valve (E) in the test position, verify that the alarm signal created by the Waterflow Pressure Alarm Switch (M) is visible at the fire panel. If applicable, check the sound of the Water Motor Alarm — it must be clear and steady.

Step 2. Place the Three-Way Alarm Control Valve (E) in the open position and verify that the normal supply and system pressures are restored. If the supply pressure is below the normal, use the instructions from the water supply to obtain the usual pressure.

Step 3. Close the Pressure Switch Valve (J) and verify operation of the Low Air Pressure Alarm Switch (N).

Step 4. Return the Pressure Switch Valve (J) to the normally open position after verifying that the alarm signal is visible at the fire panel.

Scan the QR code or enter the URL in a web browser to access the most up-to-date electronic version of this document. Data rates may apply.

docs.jci.com/tycofire/tfp1090

APPENDIX C
OCTOBER 2025

1467 Elmwood Avenue, Cranston, RI 02910 | Telephone +1-401-781-8220

© 2025 Johnson Controls. All rights reserved. All specifications and other information shown were current as of document revision date and are subject to change without notice.

Johnson Controls

Worldwide Contacts | www.tyco-fire.com

Summary Instructions Model DPV-1 Dry Pipe Valve Model European Conformity Valve Trim

DN65 and DN80 Valves with Standard Alarm Test Valve, without Model ACC-1 Accelerator

NOTICE

The procedures provided are summary instructions of the complete procedures appearing in Technical Data Sheet TFP1090. If problems occur, consult full document.

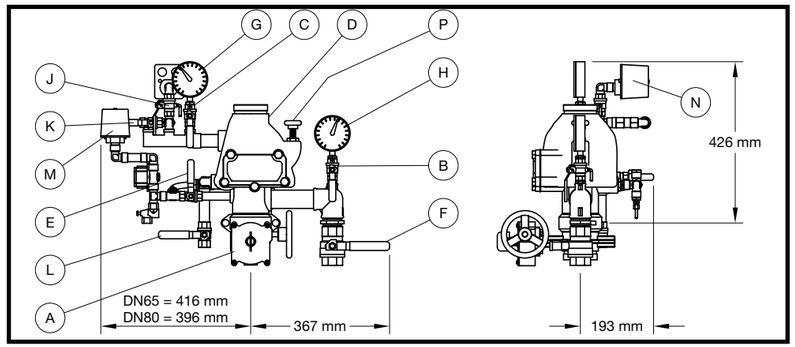

Item	Description
A	Main Control Valve
B	Pressure Gauge Valve
C	Pressure Gauge Valve
D	DPV-1 Dry Pipe Valve
E	Three-Way Alarm Control Valve
F	Main Drain Valve
G	System Air Pressure Gauge
H	Water Supply Pressure Gauge

Item	Description
J	Pressure Switch Valve
K	Air Supply Control Valve
L	Low Body Drain Valve
M	Waterflow Pressure Alarm Switch
N	Low Air Pressure Alarm Switch
P	Reset Knob

I. Normal Conditions

- The Main Control Valve (A) is opened and locked.
- The sprinkler system is filled with air and is pressurized.
- The Main Drain Valve (F), and Low Body Drain Valve (L) are closed.
- The Alarm Test Valve (E) is in the closed position.
- The Pressure Gauge Valves (B) and (C) are open.
- The Pressure Switch Valve (J) is open.
- The Air Supply Control Valve (K) is open.
- System Air Pressure Gauge (G) reads downstream air pressure.
- Water Supply Pressure Gauge (H) reads the upstream water pressure.

II. Operation

When one or more sprinklers are activated, air pressure is reduced downstream of the Dry Pipe Valve. When the air pressure is sufficiently reduced, the water pressure overcomes the differential holding the Dry Pipe Valve closed and the Dry Pipe Valve opens to permit water flow into the system piping and to be discharged from any open sprinklers. Also, with the Dry Pipe Valve open, water flows through the Alarm Port at the rear of the Dry Pipe Valve to actuate the Waterflow Pressure Alarm Switch (M) and, as applicable, the Water Motor Alarm.

III. Removing System From Service

Step 1. Close the Main Control Valve (A), and close the Air Supply Control Valve (K).

Step 2. Drain the system with the Main Drain Valve (F) and by opening all auxiliary drain valves in the system to make sure that cross-mains and branch lines are drained.

IV. Placing the System Back in Service

Step 1. Close the auxiliary drain valves after water ceases to discharge, and leave the Main Drain Valve (F) open.

Step 2. Replace the sprinklers that have operated and the sprinklers close to the fire.

Step 3. Push down on the Reset Knob (P) to allow the Dry Pipe Valve (D) to re-seat.

Step 4. Via the Air Supply Control Valve (K), pressurize the system with air to 0,7 bar, and then open and close each auxiliary drain valves in the system piping to drain any remaining water in trapped sections. Also, partially open the Low Body Drain Valve (L) to assure that the riser is completely drained. Close the Low Body Drain Valve (L) as soon as water ceases to discharge.

Step 5. Open the Air Supply Control Valve (K) to restore the system to the normal system air pressure.

Step 6. Partially open the Main Control Valve (A), and then slowly close the Main Drain Valve (F).

Step 7. Fully open the Main Control Valve (A) and lock it open.

Step 8. Reset the fire alarm panel and notify the central alarm station.

V. Weekly Test

Important: Prior to closing any valves or activating any alarms, notify local security guards and the central alarm station if applicable.

Step 1. Open the Alarm Test Valve (E), verify that the alarm signal created by the Waterflow Pressure Alarm Switch (M) is visible at the fire panel. If applicable, check the sound of the Water Motor Alarm — it must be clear and steady.

Step 2. Close the Alarm Test Valve (E), verify that the normal supply and system pressures are restored. If the supply pressure is below the normal, use the instructions from the water supply to obtain the usual pressure.

Step 3. Close the Pressure Switch Valve (J) and verify operation of the Low Air Pressure Alarm Switch (N).

Step 4. Return the Pressure Switch Valve (J) to the normally open position after verifying that the alarm signal is visible at the fire panel.

Scan the QR code or enter the URL in a web browser to access the most up-to-date electronic version of this document. Data rates may apply.

docs.jci.com/tycofire/tfp1090

APPENDIX D
OCTOBER 2025

1467 Elmwood Avenue, Cranston, RI 02910 | Telephone +1-401-781-8220

© 2025 Johnson Controls. All rights reserved. All specifications and other information shown were current as of document revision date and are subject to change without notice.

Johnson Controls

Worldwide Contacts | www.tyco-fire.com

Summary Instructions Model DPV-1 Dry Pipe Valve Model European Conformity Valve Trim

DN100 Valve with Standard Alarm Test Valve, without Model ACC-1 Accelerator

NOTICE

The procedures provided are summary instructions of the complete procedures appearing in Technical Data Sheet TFP1090. If problems occur, consult full document.

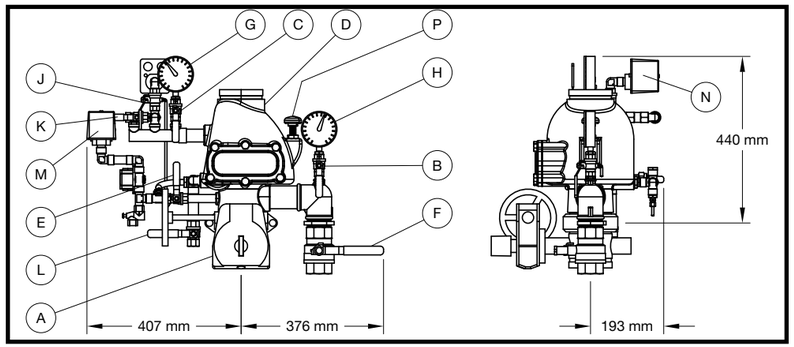

Item	Description
A	Main Control Valve
B	Pressure Gauge Valve
C	Pressure Gauge Valve
D	DPV-1 Dry Pipe Valve
E	Three-Way Alarm Control Valve
F	Main Drain Valve
G	System Air Pressure Gauge
H	Water Supply Pressure Gauge

Item	Description
J	Pressure Switch Valve
K	Air Supply Control Valve
L	Low Body Drain Valve
M	Waterflow Pressure Alarm Switch
N	Low Air Pressure Alarm Switch
P	Reset Knob

I. Normal Conditions

- The Main Control Valve (A) is opened and locked.
- The sprinkler system is filled with air and is pressurized.
- The Main Drain Valve (F), and Low Body Drain Valve (L) are closed.
- The Alarm Test Valve (E) is in the closed position.
- The Pressure Gauge Valves (B) and (C) are open.
- The Pressure Switch Valve (J) is open.
- The Air Supply Control Valve (K) is open.
- System Air Pressure Gauge (G) reads downstream air pressure.
- Water Supply Pressure Gauge (H) reads the upstream water pressure.

II. Operation

When one or more sprinklers are activated, air pressure is reduced downstream of the Dry Pipe Valve. When the air pressure is sufficiently reduced, the water pressure overcomes the differential holding the Dry Pipe Valve closed and the Dry Pipe Valve opens to permit water flow into the system piping and to be discharged from any open sprinklers. Also, with the Dry Pipe Valve open, water flows through the Alarm Port at the rear of the Dry Pipe Valve to actuate the Waterflow Pressure Alarm Switch (M) and, as applicable, the Water Motor Alarm.

III. Removing System From Service

Step 1. Close the Main Control Valve (A), and close the Air Supply Control Valve (K).

Step 2. Drain the system with the Main Drain Valve (F) and by opening all auxiliary drain valves in the system to make sure that cross-mains and branch lines are drained.

IV. Placing the System Back in Service

Step 1. Close the auxiliary drain valves after water ceases to discharge, and leave the Main Drain Valve (F) open.

Step 2. Replace the sprinklers that have operated and the sprinklers close to the fire.

Step 3. Push down on the Reset Knob (P) to allow the Dry Pipe Valve (D) to re-seat.

Step 4. Via the Air Supply Control Valve (K), pressurize the system with air to 0,7 bar, and then open and close each auxiliary drain valves in the system piping to drain any remaining water in trapped sections. Also, partially open the Low Body Drain Valve (L) to assure that the riser is completely drained. Close the Low Body Drain Valve (L) as soon as water ceases to discharge.

Step 5. Open the Air Supply Control Valve (K) to restore the system to the normal system air pressure.

Step 6. Partially open the Main Control Valve (A), and then slowly close the Main Drain Valve (F).

Step 7. Fully open the Main Control Valve (A) and lock it open.

Step 8. Reset the fire alarm panel and notify the central alarm station.

V. Weekly Test

Important: Prior to closing any valves or activating any alarms, notify local security guards and the central alarm station if applicable.

Step 1. Open the Alarm Test Valve (E), verify that the alarm signal created by the Waterflow Pressure Alarm Switch (M) is visible at the fire panel. If applicable, check the sound of the Water Motor Alarm — it must be clear and steady.

Step 2. Close the Alarm Test Valve (E), verify that the normal supply and system pressures are restored. If the supply pressure is below the normal, use the instructions from the water supply to obtain the usual pressure.

Step 3. Close the Pressure Switch Valve (J) and verify operation of the Low Air Pressure Alarm Switch (N).

Step 4. Return the Pressure Switch Valve (J) to the normally open position after verifying that the alarm signal is visible at the fire panel.

Scan the QR code or enter the URL in a web browser to access the most up-to-date electronic version of this document. Data rates may apply.

docs.jci.com/tycofire/tfp1090

APPENDIX E
OCTOBER 2025

1467 Elmwood Avenue, Cranston, RI 02910 | Telephone +1-401-781-8220

© 2025 Johnson Controls. All rights reserved. All specifications and other information shown were current as of document revision date and are subject to change without notice.

Johnson Controls

Worldwide Contacts | www.tyco-fire.com

Summary Instructions Model DPV-1 Dry Pipe Valve Model European Conformity Valve Trim

DN150 Valve with Standard Alarm Test Valve, without Model ACC-1 Accelerator

NOTICE

The procedures provided are summary instructions of the complete procedures appearing in Technical Data Sheet TFP1090. If problems occur, consult full document.

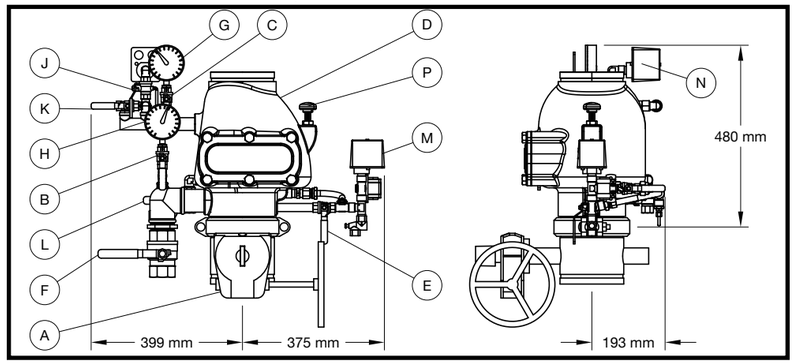

Item	Description
A	Main Control Valve
B	Pressure Gauge Valve
C	Pressure Gauge Valve
D	DPV-1 Dry Pipe Valve
E	Three-Way Alarm Control Valve
F	Main Drain Valve
G	System Air Pressure Gauge
H	Water Supply Pressure Gauge

Item	Description
J	Pressure Switch Valve
K	Air Supply Control Valve
L	Low Body Drain Valve
M	Waterflow Pressure Alarm Switch
N	Low Air Pressure Alarm Switch
P	Reset Knob

I. Normal Conditions

- The Main Control Valve (A) is opened and locked.
- The sprinkler system is filled with air and is pressurized.
- The Main Drain Valve (F), and Low Body Drain Valve (L) are closed.
- The Alarm Test Valve (E) is in the closed position.
- The Pressure Gauge Valves (B) and (C) are open.
- The Pressure Switch Valve (J) is open.
- The Air Supply Control Valve (K) is open.
- System Air Pressure Gauge (G) reads downstream air pressure.
- Water Supply Pressure Gauge (H) reads the upstream water pressure.

II. Operation

When one or more sprinklers are activated, air pressure is reduced downstream of the Dry Pipe Valve. When the air pressure is sufficiently reduced, the water pressure overcomes the differential holding the Dry Pipe Valve closed and the Dry Pipe Valve opens to permit water flow into the system piping and to be discharged from any open sprinklers. Also, with the Dry Pipe Valve open, water flows through the Alarm Port at the rear of the Dry Pipe Valve to actuate the Waterflow Pressure Alarm Switch (M) and, as applicable, the Water Motor Alarm.

III. Removing System From Service

Step 1. Close the Main Control Valve (A), and close the Air Supply Control Valve (K).

Step 2. Drain the system with the Main Drain Valve (F) and by opening all auxiliary drain valves in the system to make sure that cross-mains and branch lines are drained.

IV. Placing the System Back in Service

Step 1. Close the auxiliary drain valves after water ceases to discharge, and leave the Main Drain Valve (F) open.

Step 2. Replace the sprinklers that have operated and the sprinklers close to the fire.

Step 3. Push down on the Reset Knob (P) to allow the Dry Pipe Valve (D) to re-seat.

Step 4. Via the Air Supply Control Valve (K), pressurize the system with air to 0,7 bar, and then open and close each auxiliary drain valves in the system piping to drain any remaining water in trapped sections. Also, partially open the Low Body Drain Valve (L) to assure that the riser is completely drained. Close the Low Body Drain Valve (L) as soon as water ceases to discharge.

Step 5. Open the Air Supply Control Valve (K) to restore the system to the normal system air pressure.

Step 6. Partially open the Main Control Valve (A), and then slowly close the Main Drain Valve (F).

Step 7. Fully open the Main Control Valve (A) and lock it open.

Step 8. Reset the fire alarm panel and notify the central alarm station.

V. Weekly Test

Important: Prior to closing any valves or activating any alarms, notify local security guards and the central alarm station if applicable.

Step 1. Open the Alarm Test Valve (E), verify that the alarm signal created by the Waterflow Pressure Alarm Switch (M) is visible at the fire panel. If applicable, check the sound of the Water Motor Alarm — it must be clear and steady.

Step 2. Close the Alarm Test Valve (E), verify that the normal supply and system pressures are restored. If the supply pressure is below the normal, use the instructions from the water supply to obtain the usual pressure.

Step 3. Close the Pressure Switch Valve (J) and verify operation of the Low Air Pressure Alarm Switch (N).

Step 4. Return the Pressure Switch Valve (J) to the normally open position after verifying that the alarm signal is visible at the fire panel.

Scan the QR code or enter the URL in a web browser to access the most up-to-date electronic version of this document. Data rates may apply.

docs.jci.com/tycofire/tfp1090

APPENDIX F
OCTOBER 2025

1467 Elmwood Avenue, Cranston, RI 02910 | Telephone +1-401-781-8220

© 2025 Johnson Controls. All rights reserved. All specifications and other information shown were current as of document revision date and are subject to change without notice.

Worldwide Contacts | www.tyco-fire.com

Summary Instructions Model DPV-1 Dry Pipe Valve Model ACC-1 Dry Pipe Valve Accelerator European Conformity Valve Trim

DN65 and DN80 Valves, with Three-Way Alarm Test Valve, with Model ACC-1 Accelerator

NOTICE

The procedures provided are summary instructions of the complete procedures appearing in Technical Data Sheet TFP1090. If problems occur, consult full document.

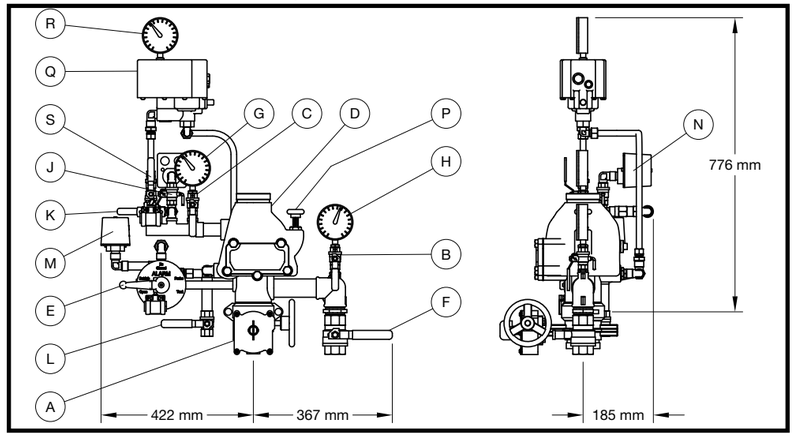

Item	Description
A	Main Control Valve
B	Pressure Gauge Valve
C	Pressure Gauge Valve
D	DPV-1 Dry Pipe Valve
E	Three-Way Alarm Control Valve
F	Main Drain Valve
G	System Air Pressure Gauge
H	Water Supply Pressure Gauge
J	Pressure Switch Valve

Item	Description
K	Air Supply Control Valve
L	Low Body Drain Valve
M	Waterflow Pressure Alarm Switch
N	Low Air Pressure Alarm Switch
P	Reset Knob
Q	Dry Pipe Valve Accelerator
R	Accelerator Control Valve
S	Accelerator Air Pressure Gauge

Scan the QR code or enter the URL in a web browser to access the most up-to-date electronic version of this document. Data rates may apply.

docs.jci.com/tycofire/tfp1090

I. Normal Conditions

- The Main Control Valve (A) is opened and locked, and the Accelerator Control Valve (S) and Air Supply Control Valve (K) are open.
- The sprinkler system is filled with air and is pressurized.
- The Main Drain Valve (F), and Low Body Drain Valve (L) are closed.
- The Three-Way Alarm Control Valve (E) is in the open position.
- The Pressure Gauge Valves (B) and (C) are open.
- The Pressure Switch Valve (J) is open.
- System Air Pressure Gauge (G) reads downstream air pressure, Water Supply Pressure Gauge (H) reads the upstream water pressure, and Accelerator Air Pressure Gauge (R) reads the Accelerator pressure.

II. Operation

When one or more sprinklers are activated, the Accelerator operates to permit system air pressure into the Dry Pipe Valve intermediate chamber. Doing so will immediately overcome the ability of the system air pressure to hold the Dry Pipe Valve closed without having to wait for system air pressure to decay to approximately 20% of the water supply. The Dry Pipe Valve immediately opens to permit water flow into the system piping and to be discharged from any open sprinklers. Also, with the Dry Pipe Valve open, water flows to actuate the Waterflow Pressure Alarm Switch (M) and, as applicable, the Water Motor Alarm.

III. Removing System From Service

Step 1. Close the Main Control Valve (A), close the Air Supply Control Valve (K), close the Accelerator Control Valve (S), and place the Three-Way Alarm Control Valve (E) in the closed position.

Step 2. Drain the system with the Main Drain Valve (F) and by opening all auxiliary drain valves in the system to make sure that cross-mains and branch lines are drained.

IV. Placing the System Back in Service

Step 1. Close the auxiliary drain valves after water ceases to discharge, and leave the Main Drain Valve (F) open.

Step 2. Place the Three-Way Alarm Control Valve (E) in the open position.

Step 3. Replace the sprinklers that have operated and the sprinklers close to the fire.

Step 4. Push down on the Reset Knob (P) to allow the Dry Pipe Valve (D) to re-seat.

Step 5. Via the Air Supply Control Valve (K), pressurize the system with air to 0,7 bar, and then open and close each auxiliary drain valves in the system piping to drain any remaining water in trapped sections. Also, partially open the Low Body Drain Valve (L) to assure that the riser is completely drained. Close the Low Body Drain Valve (L) as soon as water ceases to discharge.

Step 6. Open the Air Supply Control Valve (K) to restore the system to the normal system air pressure.

Step 7. Reset Accelerator (Q) using the instruction on its resetting label.

Step 8. Partially open the Main Control Valve (A), and then slowly close the Main Drain Valve (F).

Step 9. Fully open the Main Control Valve (A) and lock it open.

Step 10. Reset the fire alarm panel and notify the central alarm station.

V. Weekly Test

Important: Prior to closing any valves or activating any alarms, notify local security guards and the central alarm station if applicable.

Step 1. Place the Three-Way Alarm Control Valve (E) in the test position, verify that the alarm signal created by the Waterflow Pressure Alarm Switch (M) is visible at the fire panel. If applicable, check the sound of the Water Motor Alarm — it must be clear and steady.

Step 2. Place the Three-Way Alarm Control Valve (E) in the open position and verify that the normal supply and system pressures are restored. If the supply pressure is below the normal, use the instructions from the water supply to obtain the usual pressure.

Step 3. Close the Pressure Switch Valve (J) and verify operation of the Low Air Pressure Alarm Switch (N).

Step 4. Return the Pressure Switch Valve (J) to the normally open position after verifying that the alarm signal is visible at the fire panel.

APPENDIX G
OCTOBER 2025

1467 Elmwood Avenue, Cranston, RI 02910 | Telephone +1-401-781-8220

© 2025 Johnson Controls. All rights reserved. All specifications and other information shown were current as of document revision date and are subject to change without notice.

Worldwide Contacts | www.tyco-fire.com

Summary Instructions Model DPV-1 Dry Pipe Valve Model ACC-1 Dry Pipe Valve Accelerator European Conformity Valve Trim

DN100 Valve with Three-Way Alarm Test Valve, with Model ACC-1 Accelerator

NOTICE

The procedures provided are summary instructions of the complete procedures appearing in Technical Data Sheet TFP1090. If problems occur, consult full document.

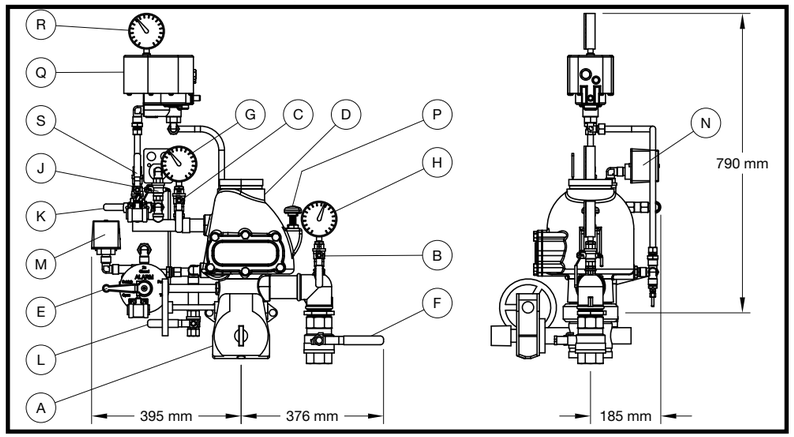

Item	Description
A	Main Control Valve
B	Pressure Gauge Valve
C	Pressure Gauge Valve
D	DPV-1 Dry Pipe Valve
E	Three-Way Alarm Control Valve
F	Main Drain Valve
G	System Air Pressure Gauge
H	Water Supply Pressure Gauge
J	Pressure Switch Valve

Item	Description
K	Air Supply Control Valve
L	Low Body Drain Valve
M	Waterflow Pressure Alarm Switch
N	Low Air Pressure Alarm Switch
P	Reset Knob
Q	Dry Pipe Valve Accelerator
R	Accelerator Control Valve
S	Accelerator Air Pressure Gauge

Scan the QR code or enter the URL in a web browser to access the most up-to-date electronic version of this document. Data rates may apply.

docs.jci.com/tycofire/tfp1090

I. Normal Conditions

- The Main Control Valve (A) is opened and locked, and the Accelerator Control Valve (S) and Air Supply Control Valve (K) are open.
- The sprinkler system is filled with air and is pressurized.
- The Main Drain Valve (F), and Low Body Drain Valve (L) are closed.
- The Three-Way Alarm Control Valve (E) is in the open position.
- The Pressure Gauge Valves (B) and (C) are open.
- The Pressure Switch Valve (J) is open.
- System Air Pressure Gauge (G) reads downstream air pressure, Water Supply Pressure Gauge (H) reads the upstream water pressure, and Accelerator Air Pressure Gauge (R) reads the Accelerator pressure.

II. Operation

When one or more sprinklers are activated, the Accelerator operates to permit system air pressure into the Dry Pipe Valve intermediate chamber. Doing so will immediately overcome the ability of the system air pressure to hold the Dry Pipe Valve closed without having to wait for system air pressure to decay to approximately 20% of the water supply. The Dry Pipe Valve immediately opens to permit water flow into the system piping and to be discharged from any open sprinklers. Also, with the Dry Pipe Valve open, water flows to actuate the Waterflow Pressure Alarm Switch (M) and, as applicable, the Water Motor Alarm.

III. Removing System From Service

Step 1. Close the Main Control Valve (A), close the Air Supply Control Valve (K), close the Accelerator Control Valve (S), and place the Three-Way Alarm Control Valve (E) in the closed position.

Step 2. Drain the system with the Main Drain Valve (F) and by opening all auxiliary drain valves in the system to make sure that cross-mains and branch lines are drained.

IV. Placing the System Back in Service

Step 1. Close the auxiliary drain valves after water ceases to discharge, and leave the Main Drain Valve (F) open.

Step 2. Place the Three-Way Alarm Control Valve (E) in the open position.

Step 3. Replace the sprinklers that have operated and the sprinklers close to the fire.

Step 4. Push down on the Reset Knob (P) to allow the Dry Pipe Valve (D) to re-seat.

Step 5. Via the Air Supply Control Valve (K), pressurize the system with air to 0,7 bar, and then open and close each auxiliary drain valves in the system piping to drain any remaining water in trapped sections. Also, partially open the Low Body Drain Valve (L) to assure that the riser is completely drained. Close the Low Body Drain Valve (L) as soon as water ceases to discharge.

Step 6. Open the Air Supply Control Valve (K) to restore the system to the normal system air pressure.

Step 7. Reset Accelerator (Q) using the instruction on its resetting label.

Step 8. Partially open the Main Control Valve (A), and then slowly close the Main Drain Valve (F).

Step 9. Fully open the Main Control Valve (A) and lock it open.

Step 10. Reset the fire alarm panel and notify the central alarm station.

V. Weekly Test

Important: Prior to closing any valves or activating any alarms, notify local security guards and the central alarm station if applicable.

Step 1. Place the Three-Way Alarm Control Valve (E) in the test position, verify that the alarm signal created by the Waterflow Pressure Alarm Switch (M) is visible at the fire panel. If applicable, check the sound of the Water Motor Alarm — it must be clear and steady.

Step 2. Place the Three-Way Alarm Control Valve (E) in the open position and verify that the normal supply and system pressures are restored. If the supply pressure is below the normal, use the instructions from the water supply to obtain the usual pressure.

Step 3. Close the Pressure Switch Valve (J) and verify operation of the Low Air Pressure Alarm Switch (N).

Step 4. Return the Pressure Switch Valve (J) to the normally open position after verifying that the alarm signal is visible at the fire panel.

APPENDIX H
OCTOBER 2025

1467 Elmwood Avenue, Cranston, RI 02910 | Telephone +1-401-781-8220

© 2025 Johnson Controls. All rights reserved. All specifications and other information shown were current as of document revision date and are subject to change without notice.

Worldwide Contacts | www.tyco-fire.com

Summary Instructions Model DPV-1 Dry Pipe Valve Model ACC-1 Dry Pipe Valve Accelerator European Conformity Valve Trim

DN150 Valve with Three-Way Alarm Test Valve, with Model ACC-1 Accelerator

NOTICE

The procedures provided are summary instructions of the complete procedures appearing in Technical Data Sheet TFP1090. If problems occur, consult full document.

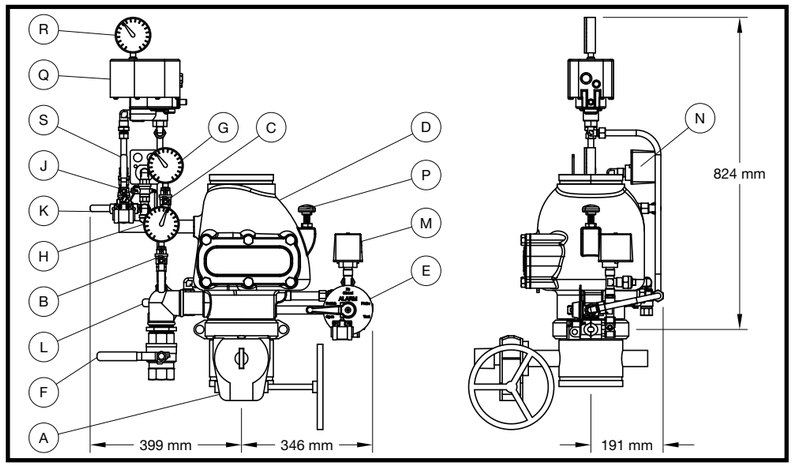

Item	Description
A	Main Control Valve
B	Pressure Gauge Valve
C	Pressure Gauge Valve
D	DPV-1 Dry Pipe Valve
E	Three-Way Alarm Control Valve
F	Main Drain Valve
G	System Air Pressure Gauge
H	Water Supply Pressure Gauge
J	Pressure Switch Valve

Item	Description
K	Air Supply Control Valve
L	Low Body Drain Valve
M	Waterflow Pressure Alarm Switch
N	Low Air Pressure Alarm Switch
P	Reset Knob
Q	Dry Pipe Valve Accelerator
R	Accelerator Control Valve
S	Accelerator Air Pressure Gauge

Scan the QR code or enter the URL in a web browser to access the most up-to-date electronic version of this document. Data rates may apply.

docs.jci.com/tycofire/tfp1090

I. Normal Conditions

- The Main Control Valve (A) is opened and locked, and the Accelerator Control Valve (S) and Air Supply Control Valve (K) are open.
- The sprinkler system is filled with air and is pressurized.
- The Main Drain Valve (F), and Low Body Drain Valve (L) are closed.
- The Three-Way Alarm Control Valve (E) is in the open position.
- The Pressure Gauge Valves (B) and (C) are open.
- The Pressure Switch Valve (J) is open.
- System Air Pressure Gauge (G) reads downstream air pressure, Water Supply Pressure Gauge (H) reads the upstream water pressure, and Accelerator Air Pressure Gauge (R) reads the Accelerator pressure.

II. Operation

When one or more sprinklers are activated, the Accelerator operates to permit system air pressure into the Dry Pipe Valve intermediate chamber. Doing so will immediately overcome the ability of the system air pressure to hold the Dry Pipe Valve closed without having to wait for system air pressure to decay to approximately 20% of the water supply. The Dry Pipe Valve immediately opens to permit water flow into the system piping and to be discharged from any open sprinklers. Also, with the Dry Pipe Valve open, water flows to actuate the Waterflow Pressure Alarm Switch (M) and, as applicable, the Water Motor Alarm.

III. Removing System From Service

Step 1. Close the Main Control Valve (A), close the Air Supply Control Valve (K), close the Accelerator Control Valve (S), and place the Three-Way Alarm Control Valve (E) in the closed position.

Step 2. Drain the system with the Main Drain Valve (F) and by opening all auxiliary drain valves in the system to make sure that cross-mains and branch lines are drained.

IV. Placing the System Back in Service

Step 1. Close the auxiliary drain valves after water ceases to discharge, and leave the Main Drain Valve (F) open.

Step 2. Place the Three-Way Alarm Control Valve (E) in the open position.

Step 3. Replace the sprinklers that have operated and the sprinklers close to the fire.

Step 4. Push down on the Reset Knob (P) to allow the Dry Pipe Valve (D) to re-seat.

Step 5. Via the Air Supply Control Valve (K), pressurize the system with air to 0,7 bar, and then open and close each auxiliary drain valves in the system piping to drain any remaining water in trapped sections. Also, partially open the Low Body Drain Valve (L) to assure that the riser is completely drained. Close the Low Body Drain Valve (L) as soon as water ceases to discharge.

Step 6. Open the Air Supply Control Valve (K) to restore the system to the normal system air pressure.

Step 7. Reset Accelerator (Q) using the instruction on its resetting label.

Step 8. Partially open the Main Control Valve (A), and then slowly close the Main Drain Valve (F).

Step 9. Fully open the Main Control Valve (A) and lock it open.

Step 10. Reset the fire alarm panel and notify the central alarm station.

V. Weekly Test

Important: Prior to closing any valves or activating any alarms, notify local security guards and the central alarm station if applicable.

Step 1. Place the Three-Way Alarm Control Valve (E) in the test position, verify that the alarm signal created by the Waterflow Pressure Alarm Switch (M) is visible at the fire panel. If applicable, check the sound of the Water Motor Alarm — it must be clear and steady.

Step 2. Place the Three-Way Alarm Control Valve (E) in the open position and verify that the normal supply and system pressures are restored. If the supply pressure is below the normal, use the instructions from the water supply to obtain the usual pressure.

Step 3. Close the Pressure Switch Valve (J) and verify operation of the Low Air Pressure Alarm Switch (N).

Step 4. Return the Pressure Switch Valve (J) to the normally open position after verifying that the alarm signal is visible at the fire panel.

APPENDIX I
OCTOBER 2025

1467 Elmwood Avenue, Cranston, RI 02910 | Telephone +1-401-781-8220

© 2025 Johnson Controls. All rights reserved. All specifications and other information shown were current as of document revision date and are subject to change without notice.

Johnson Controls

Worldwide Contacts | www.tyco-fire.com

Summary Instructions Model DPV-1 Dry Pipe Valve Model ACC-1 Dry Pipe Valve Accelerator European Conformity Valve Trim

DN65 and DN80 Valves with Standard Alarm Test Valve, with Model ACC-1 Accelerator

NOTICE

The procedures provided are summary instructions of the complete procedures appearing in Technical Data Sheet TFP1090. If problems occur, consult full document.

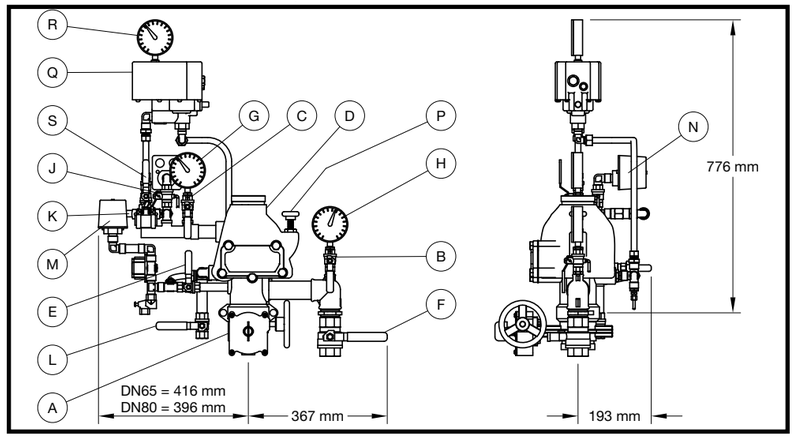

Item	Description
A	Main Control Valve
B	Pressure Gauge Valve
C	Pressure Gauge Valve
D	DPV-1 Dry Pipe Valve
E	Three-Way Alarm Control Valve
F	Main Drain Valve
G	System Air Pressure Gauge
H	Water Supply Pressure Gauge
J	Pressure Switch Valve

Item	Description
K	Air Supply Control Valve
L	Low Body Drain Valve
M	Waterflow Pressure Alarm Switch
N	Low Air Pressure Alarm Switch
P	Reset Knob
Q	Dry Pipe Valve Accelerator
R	Accelerator Control Valve
S	Accelerator Air Pressure Gauge

Scan the QR code or enter the URL in a web browser to access the most up-to-date electronic version of this document. Data rates may apply.

docs.jci.com/tycofire/tfp1090

I. Normal Conditions

- The Main Control Valve (A) is opened and locked, and the Accelerator Control Valve (S) and Air Supply Control Valve (K) are open.
- The sprinkler system is filled with air and is pressurized.
- The Main Drain Valve (F), and Low Body Drain Valve (L) are closed.
- The Alarm Test Valve (E) is in the closed position.
- The Pressure Gauge Valves (B) and (C) are open.
- The Pressure Switch Valve (J) is open.
- System Air Pressure Gauge (G) reads downstream air pressure, Water Supply Pressure Gauge (H) reads the upstream water pressure, and Accelerator Air Pressure Gauge (R) reads the Accelerator pressure.

II. Operation

When one or more sprinklers are activated, the Accelerator operates to permit system air pressure into the Dry Pipe Valve intermediate chamber. Doing so will immediately overcome the ability of the system air pressure to hold the Dry Pipe Valve closed without having to wait for system air pressure to decay to approximately 20% of the water supply. The Dry Pipe Valve immediately opens to permit water flow into the system piping and to be discharged from any open sprinklers. Also, with the Dry Pipe Valve open, water flows to actuate the Waterflow Pressure Alarm Switch (M) and, as applicable, the Water Motor Alarm.

III. Removing System From Service

Step 1. Close the Main Control Valve (A), close the Air Supply Control Valve (K), and close the Accelerator Control Valve (S).

Step 2. Drain the system with the Main Drain Valve (F) and by opening all auxiliary drain valves in the system to make sure that cross-mains and branch lines are drained.

IV. Placing the System Back in Service

Step 1. Close the auxiliary drain valves after water ceases to discharge, and leave the Main Drain Valve (F) open.

Step 2. Replace the sprinklers that have operated and the sprinklers close to the fire.

Step 3. Push down on the Reset Knob (P) to allow the Dry Pipe Valve (D) to re-seat.

Step 4. Via the Air Supply Control Valve (K), pressurize the system with air to 0,7 bar, and then open and close each auxiliary drain valves in the system piping to drain any remaining water in trapped sections. Also, partially open the Low Body Drain Valve (L) to assure that the riser is completely drained. Close the Low Body Drain Valve (L) as soon as water ceases to discharge.

Step 5. Open the Air Supply Control Valve (K) to restore the system to the normal system air pressure.

Step 6. Reset Accelerator (Q) using the instruction on its resetting label.

Step 7. Partially open the Main Control Valve (A), and then slowly close the Main Drain Valve (F).

Step 8. Fully open the Main Control Valve (A) and lock it open.

Step 9. Reset the fire alarm panel and notify the central alarm station.

V. Weekly Test

Important: Prior to closing any valves or activating any alarms, notify local security guards and the central alarm station if applicable.

Step 1. Open the Alarm Test Valve (E), verify that the alarm signal created by the Waterflow Pressure Alarm Switch (M) is visible at the fire panel. If applicable, check the sound of the Water Motor Alarm — it must be clear and steady.

Step 2. Close the Alarm Test Valve (E), verify that the normal supply and system pressures are restored. If the supply pressure is below the normal, use the instructions from the water supply to obtain the usual pressure.

Step 3. Close the Pressure Switch Valve (J) and verify operation of the Low Air Pressure Alarm Switch (N).

Step 4. Return the Pressure Switch Valve (J) to the normally open position after verifying that the alarm signal is visible at the fire panel.

APPENDIX J
OCTOBER 2025

1467 Elmwood Avenue, Cranston, RI 02910 | Telephone +1-401-781-8220

© 2025 Johnson Controls. All rights reserved. All specifications and other information shown were current as of document revision date and are subject to change without notice.

Johnson Controls

Worldwide Contacts | www.tyco-fire.com

Summary Instructions Model DPV-1 Dry Pipe Valve Model ACC-1 Dry Pipe Valve Accelerator European Conformity Valve Trim

DN100 Valve with Standard Alarm Test Valve, with Model ACC-1 Accelerator

NOTICE

The procedures provided are summary instructions of the complete procedures appearing in Technical Data Sheet TFP1090. If problems occur, consult full document.

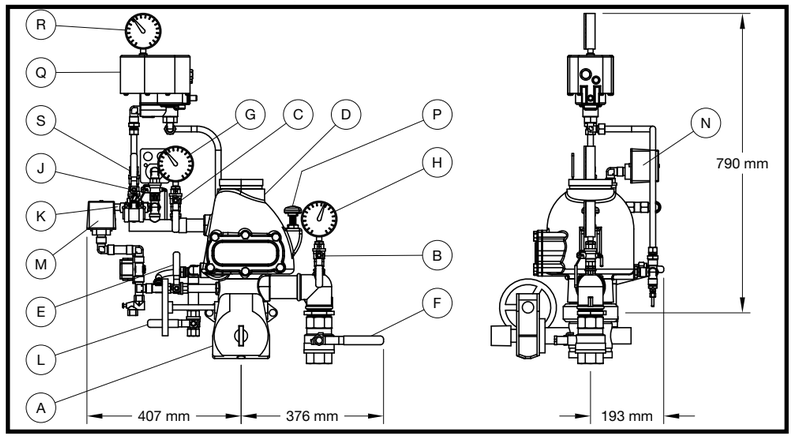

Item	Description
A	Main Control Valve
B	Pressure Gauge Valve
C	Pressure Gauge Valve
D	DPV-1 Dry Pipe Valve
E	Three-Way Alarm Control Valve
F	Main Drain Valve
G	System Air Pressure Gauge
H	Water Supply Pressure Gauge
J	Pressure Switch Valve

Item	Description
K	Air Supply Control Valve
L	Low Body Drain Valve
M	Waterflow Pressure Alarm Switch
N	Low Air Pressure Alarm Switch
P	Reset Knob
Q	Dry Pipe Valve Accelerator
R	Accelerator Control Valve
S	Accelerator Air Pressure Gauge

Scan the QR code or enter the URL in a web browser to access the most up-to-date electronic version of this document. Data rates may apply.

docs.jci.com/tycofire/tfp1090

I. Normal Conditions

- The Main Control Valve (A) is opened and locked, and the Accelerator Control Valve (S) and Air Supply Control Valve (K) are open.
- The sprinkler system is filled with air and is pressurized.
- The Main Drain Valve (F), and Low Body Drain Valve (L) are closed.
- The Alarm Test Valve (E) is in the closed position.
- The Pressure Gauge Valves (B) and (C) are open.
- The Pressure Switch Valve (J) is open.
- System Air Pressure Gauge (G) reads downstream air pressure, Water Supply Pressure Gauge (H) reads the upstream water pressure, and Accelerator Air Pressure Gauge (R) reads the Accelerator pressure.

II. Operation

When one or more sprinklers are activated, the Accelerator operates to permit system air pressure into the Dry Pipe Valve intermediate chamber. Doing so will immediately overcome the ability of the system air pressure to hold the Dry Pipe Valve closed without having to wait for system air pressure to decay to approximately 20% of the water supply. The Dry Pipe Valve immediately opens to permit water flow into the system piping and to be discharged from any open sprinklers. Also, with the Dry Pipe Valve open, water flows to actuate the Waterflow Pressure Alarm Switch (M) and, as applicable, the Water Motor Alarm.

III. Removing System From Service

Step 1. Close the Main Control Valve (A), close the Air Supply Control Valve (K), and close the Accelerator Control Valve (S).

Step 2. Drain the system with the Main Drain Valve (F) and by opening all auxiliary drain valves in the system to make sure that cross-mains and branch lines are drained.

IV. Placing the System Back in Service

Step 1. Close the auxiliary drain valves after water ceases to discharge, and leave the Main Drain Valve (F) open.

Step 2. Replace the sprinklers that have operated and the sprinklers close to the fire.

Step 3. Push down on the Reset Knob (P) to allow the Dry Pipe Valve (D) to re-seat.

Step 4. Via the Air Supply Control Valve (K), pressurize the system with air to 0,7 bar, and then open and close each auxiliary drain valves in the system piping to drain any remaining water in trapped sections. Also, partially open the Low Body Drain Valve (L) to assure that the riser is completely drained. Close the Low Body Drain Valve (L) as soon as water ceases to discharge.

Step 5. Open the Air Supply Control Valve (K) to restore the system to the normal system air pressure.

Step 6. Reset Accelerator (Q) using the instruction on its resetting label.

Step 7. Partially open the Main Control Valve (A), and then slowly close the Main Drain Valve (F).

Step 8. Fully open the Main Control Valve (A) and lock it open.

Step 9. Reset the fire alarm panel and notify the central alarm station.

V. Weekly Test

Important: Prior to closing any valves or activating any alarms, notify local security guards and the central alarm station if applicable.

Step 1. Open the Alarm Test Valve (E), verify that the alarm signal created by the Waterflow Pressure Alarm Switch (M) is visible at the fire panel. If applicable, check the sound of the Water Motor Alarm — it must be clear and steady.

Step 2. Close the Alarm Test Valve (E), verify that the normal supply and system pressures are restored. If the supply pressure is below the normal, use the instructions from the water supply to obtain the usual pressure.

Step 3. Close the Pressure Switch Valve (J) and verify operation of the Low Air Pressure Alarm Switch (N).

Step 4. Return the Pressure Switch Valve (J) to the normally open position after verifying that the alarm signal is visible at the fire panel.

APPENDIX K
OCTOBER 2025

1467 Elmwood Avenue, Cranston, RI 02910 | Telephone +1-401-781-8220

© 2025 Johnson Controls. All rights reserved. All specifications and other information shown were current as of document revision date and are subject to change without notice.

Johnson Controls

Worldwide Contacts | www.tyco-fire.com

Summary Instructions Model DPV-1 Dry Pipe Valve Model ACC-1 Dry Pipe Valve Accelerator European Conformity Valve Trim

DN150 Valve with Standard Alarm Test Valve, with Model ACC-1 Accelerator

NOTICE

The procedures provided are summary instructions of the complete procedures appearing in Technical Data Sheet TFP1090. If problems occur, consult full document.

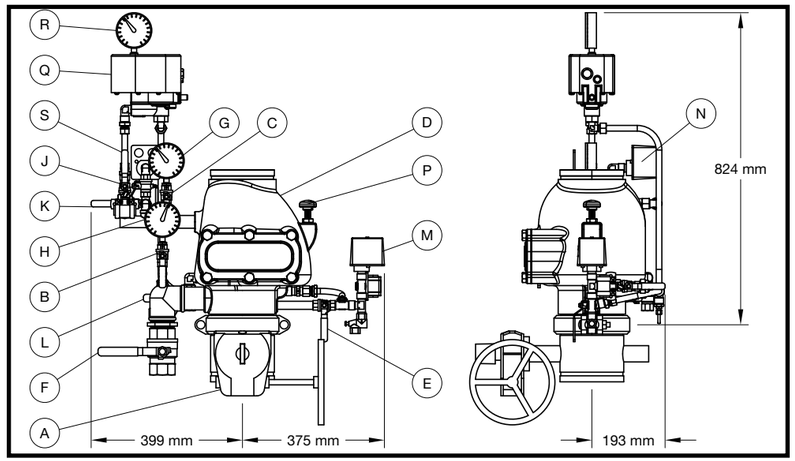

Item	Description
A	Main Control Valve
B	Pressure Gauge Valve
C	Pressure Gauge Valve
D	DPV-1 Dry Pipe Valve
E	Three-Way Alarm Control Valve
F	Main Drain Valve
G	System Air Pressure Gauge
H	Water Supply Pressure Gauge
J	Pressure Switch Valve

Item	Description
K	Air Supply Control Valve
L	Low Body Drain Valve
M	Waterflow Pressure Alarm Switch
N	Low Air Pressure Alarm Switch
P	Reset Knob
Q	Dry Pipe Valve Accelerator
R	Accelerator Control Valve
S	Accelerator Air Pressure Gauge

Scan the QR code or enter the URL in a web browser to access the most up-to-date electronic version of this document. Data rates may apply.

docs.jci.com/tycofire/tfp1090

I. Normal Conditions

- The Main Control Valve (A) is opened and locked, and the Accelerator Control Valve (S) and Air Supply Control Valve (K) are open.
- The sprinkler system is filled with air and is pressurized.
- The Main Drain Valve (F), and Low Body Drain Valve (L) are closed.
- The Alarm Test Valve (E) is in the closed position.
- The Pressure Gauge Valves (B) and (C) are open.
- The Pressure Switch Valve (J) is open.
- System Air Pressure Gauge (G) reads downstream air pressure, Water Supply Pressure Gauge (H) reads the upstream water pressure, and Accelerator Air Pressure Gauge (R) reads the Accelerator pressure.

II. Operation

When one or more sprinklers are activated, the Accelerator operates to permit system air pressure into the Dry Pipe Valve intermediate chamber. Doing so will immediately overcome the ability of the system air pressure to hold the Dry Pipe Valve closed without having to wait for system air pressure to decay to approximately 20% of the water supply. The Dry Pipe Valve immediately opens to permit water flow into the system piping and to be discharged from any open sprinklers. Also, with the Dry Pipe Valve open, water flows to actuate the Waterflow Pressure Alarm Switch (M) and, as applicable, the Water Motor Alarm.

III. Removing System From Service

Step 1. Close the Main Control Valve (A), close the Air Supply Control Valve (K), and close the Accelerator Control Valve (S).

Step 2. Drain the system with the Main Drain Valve (F) and by opening all auxiliary drain valves in the system to make sure that cross-mains and branch lines are drained.

IV. Placing the System Back in Service

Step 1. Close the auxiliary drain valves after water ceases to discharge, and leave the Main Drain Valve (F) open.

Step 2. Replace the sprinklers that have operated and the sprinklers close to the fire.

Step 3. Push down on the Reset Knob (P) to allow the Dry Pipe Valve (D) to re-seat.

Step 4. Via the Air Supply Control Valve (K), pressurize the system with air to 0,7 bar, and then open and close each auxiliary drain valves in the system piping to drain any remaining water in trapped sections. Also, partially open the Low Body Drain Valve (L) to assure that the riser is completely drained. Close the Low Body Drain Valve (L) as soon as water ceases to discharge.

Step 5. Open the Air Supply Control Valve (K) to restore the system to the normal system air pressure.

Step 6. Reset Accelerator (Q) using the instruction on its resetting label.

Step 7. Partially open the Main Control Valve (A), and then slowly close the Main Drain Valve (F).

Step 8. Fully open the Main Control Valve (A) and lock it open.

Step 9. Reset the fire alarm panel and notify the central alarm station.

V. Weekly Test

Important: Prior to closing any valves or activating any alarms, notify local security guards and the central alarm station if applicable.

Step 1. Open the Alarm Test Valve (E), verify that the alarm signal created by the Waterflow Pressure Alarm Switch (M) is visible at the fire panel. If applicable, check the sound of the Water Motor Alarm — it must be clear and steady.

Step 2. Close the Alarm Test Valve (E), verify that the normal supply and system pressures are restored. If the supply pressure is below the normal, use the instructions from the water supply to obtain the usual pressure.

Step 3. Close the Pressure Switch Valve (J) and verify operation of the Low Air Pressure Alarm Switch (N).

Step 4. Return the Pressure Switch Valve (J) to the normally open position after verifying that the alarm signal is visible at the fire panel.

APPENDIX L
OCTOBER 2025

1467 Elmwood Avenue, Cranston, RI 02910 | Telephone +1-401-781-8220

© 2025 Johnson Controls. All rights reserved. All specifications and other information shown were current as of document revision date and are subject to change without notice.

Johnson Controls