PrePaK™ Fully Integrated System

Features

- Compact with small footprint
- Fits through standard 36” door
- 12-gauge powder coated steel, red exterior and interior
- Integral release control panel
- Multiple air compressor options
- Select models available with integral nitrogen generator
- Select models available with General Air Products Vapor Pipe Shield System

Product Description

The Reliable Model DDX PrePaK is a completely self-contained, supervised system that can be readily installed within a floor space (not including door swing) of 4.7 ft^2 (0.43 m^2) for 2” through 4” systems, and 6.5 ft^2 (0.60 m^2) for the 6” and 8” systems and those systems incorporating a nitrogen generator.

This document is intended to provide basic information for the proper selection of equipment. Additional PrePaK information can be found on the Installation, Operation, and Maintenance Manual (Bulletin 761).

Installation of the PrePaK requires three piping connections: the water supply, the sprinkler system, and the drain. Reference locations of these piping connections, along with general PrePaK dimensions are shown on pages 2 and 3 of this bulletin. Individual power connections are required for the release control panel, air compressor, and nitrogen generator, where so equipped. A clear sight glass is provided as standard equipment on the system drain of each unit for verification of flow testing and drainage.



Note: Legacy black exterior/white interior cabinets are available as special order; please allow additional time for production. Contact the factory for details.

Table A provides a summary of the models and sizes available along with related agency approvals. Additional information for each model will be found on pages referenced in Table A.

Product Summary — **Table A**

System Type/Operation	Sizes	Approvals	See Page
1. Type D Single/Double Interlock Preaction, Electric	2” – 8”	UL, FM	4
2. Type F Double Interlock Preaction, Electric/Pneumatic	2” – 8”	UL, FM	5
3. DDX-LP (Low Pressure) Dry	2” – 8”	UL, FM	6
4. DDX Deluge, Wet Pilot Line	2” – 8”	UL, FM	7
5. DDX Deluge, Dry Pilot Line	2” – 8”	UL, FM	8
6. DDX Deluge, Electric	2” – 8”	UL, FM	9
7. DDX Single Interlock Preaction, Dry Pilot Line	2” – 8”	UL, FM	10
8. Single Interlock Preaction, Wet Pilot Line	2” – 8”	UL, FM	11
9. Type PL Double Interlock Preaction, Pneumatic/Pneumatic	2” – 8”	UL, FM	12
10. Non-Interlock Preaction System	2” - 8”	UL	13
11. DDX-LP to Type F Convertible	2” - 8”	UL, FM	14

Note:

1. For units with integral nitrogen generator, the generator is FM Approved to Standard 1035, Nitrogen Generators for Corrosion Mitigation. Nitrogen generator available for system types 1, 2, 3, and 11 above only, and are limited to 2” (50 mm) through 6” (150 mm) systems.
2. cULus Listed General Air Products Vapor Pipe Shield (VPS) system available for system types 1, 2, 3, 7, 8, 9, 10, and 11. Please reference page 18 of this document.

Standard Unit PrePaK Dimensions (Including VPS Equipped Units)

Figure 1

STANDARD UNIT DIMENSIONS — INCHES [CM]

SYSTEM SIZE	A	B	C	D	E	F	G	H	J	K	L	M WITHOUT UPPER VALVE	M WITH UPPER VALVE
2" (50MM)	25.0 [63.5]	28.3 [71.8]	70.0 [177.8]	50.0 [127.0]	13.1 [33.2]	14.3 [36.3]	14.3 [36.3]	6.3 [16.0]	13.6 [34.5]	1.8 [4.5]	3.3 [8.3]	27.2 [69.0]	24.1 [61.2]
2-1/2" (65MM)	25.0 [63.5]	28.3 [71.8]	70.0 [177.8]	50.0 [127.0]	13.1 [33.2]	14.3 [36.3]	14.3 [36.3]	6.3 [16.0]	13.6 [34.5]	1.8 [4.5]	3.3 [8.3]	27.9 [70.8]	24.1 [61.2]
3" (80MM)	25.0 [63.5]	28.3 [71.8]	70.0 [177.8]	50.0 [127.0]	13.1 [33.2]	14.3 [36.3]	14.3 [36.3]	6.3 [16.0]	13.6 [34.5]	1.8 [4.5]	3.3 [8.3]	27.9 [70.8]	24.1 [61.2]
4" (100MM)	25.0 [63.5]	28.3 [71.8]	70.0 [177.8]	50.0 [127.0]	13.1 [33.2]	14.3 [36.3]	14.3 [36.3]	6.3 [16.0]	13.6 [34.5]	1.8 [4.5]	3.3 [8.3]	28.5 [72.3]	24.1 [61.2]
6" (150MM)	30.0 [76.2]	33.0 [88.8]	74.0 [188.0]	60.0 [152.4]	14.8 [37.5]	15.0 [38.1]	15.0 [38.1]	7.0 [17.7]	13.6 [34.5]	5.3 [13.4]	4.8 [12.1]	29.3 [74.4]	24.1 [61.2]
8" (200MM)	30.0 [76.2]	33.0 [88.8]	74.0 [188.0]	60.0 [152.4]	14.8 [37.5]	15.0 [38.1]	15.0 [38.1]	7.0 [17.7]	13.6 [34.5]	5.3 [13.4]	4.8 [12.1]	26.2 [66.5]	20.5 [52.0]

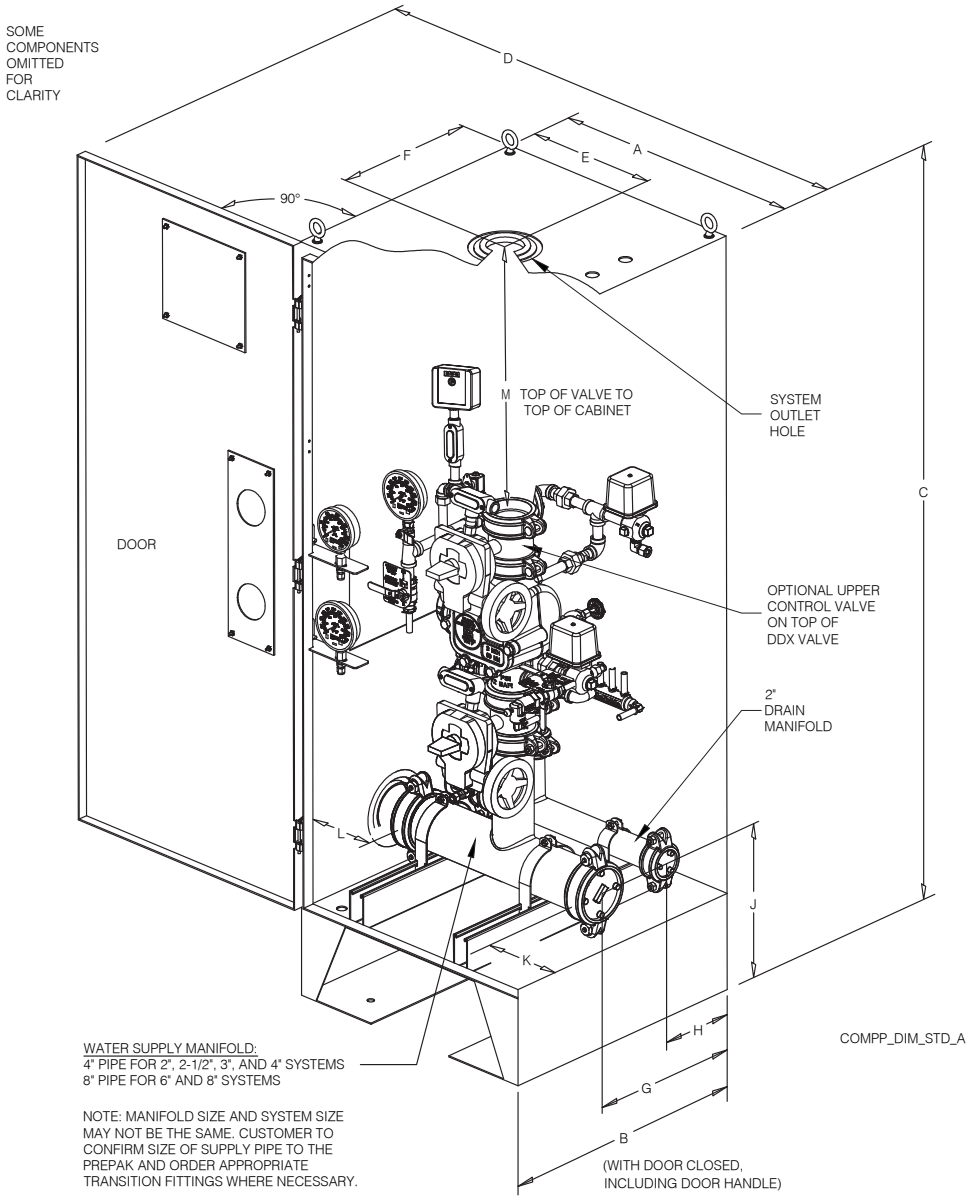

NITROGEN GENERATOR UNIT DIMENSIONS

INCHES
[CM]

SYSTEM SIZE	A	B	C	D	E	F	G	H	J	K	L	M WITHOUT UPPER VALVE	M WITH UPPER VALVE
2" (50MM)	30.0 [76.2]	33.1 [84.0]	74.0 [188.0]	60.0 [152.4]	12.8 [32.4]	19.7 [50.0]	19.7 [50.0]	11.6 [29.4]	11.6 [29.4]	8.0 [20.3]	2.0 [5.1]	34.0 [86.3]	30.0 [76.2]
2-1/2" (65MM)	30.0 [76.2]	33.1 [84.0]	74.0 [188.0]	60.0 [152.4]	12.8 [32.4]	19.7 [50.0]	19.7 [50.0]	11.6 [29.4]	11.6 [29.4]	8.0 [20.3]	2.0 [5.1]	34.0 [86.3]	30.0 [76.2]
3" (80MM)	30.0 [76.2]	33.1 [84.0]	74.0 [188.0]	60.0 [152.4]	12.8 [32.4]	19.7 [50.0]	19.7 [50.0]	11.6 [29.4]	11.6 [29.4]	8.0 [20.3]	2.0 [5.1]	34.0 [86.3]	30.0 [76.2]
4" (100MM)	30.0 [76.2]	33.1 [84.0]	74.0 [188.0]	60.0 [152.4]	12.8 [32.4]	19.7 [50.0]	19.7 [50.0]	11.6 [29.4]	11.6 [29.4]	8.0 [20.3]	2.0 [5.1]	34.0 [86.3]	29.5 [74.9]
6" (150MM)	30.0 [76.2]	33.1 [84.0]	74.0 [188.0]	60.0 [152.4]	12.6 [32.0]	18.0 [45.7]	18.0 [45.7]	10.0 [25.4]	11.6 [29.4]	8.1 [20.6]	2.0 [5.1]	31.6 [80.3]	26.4 [67.1]

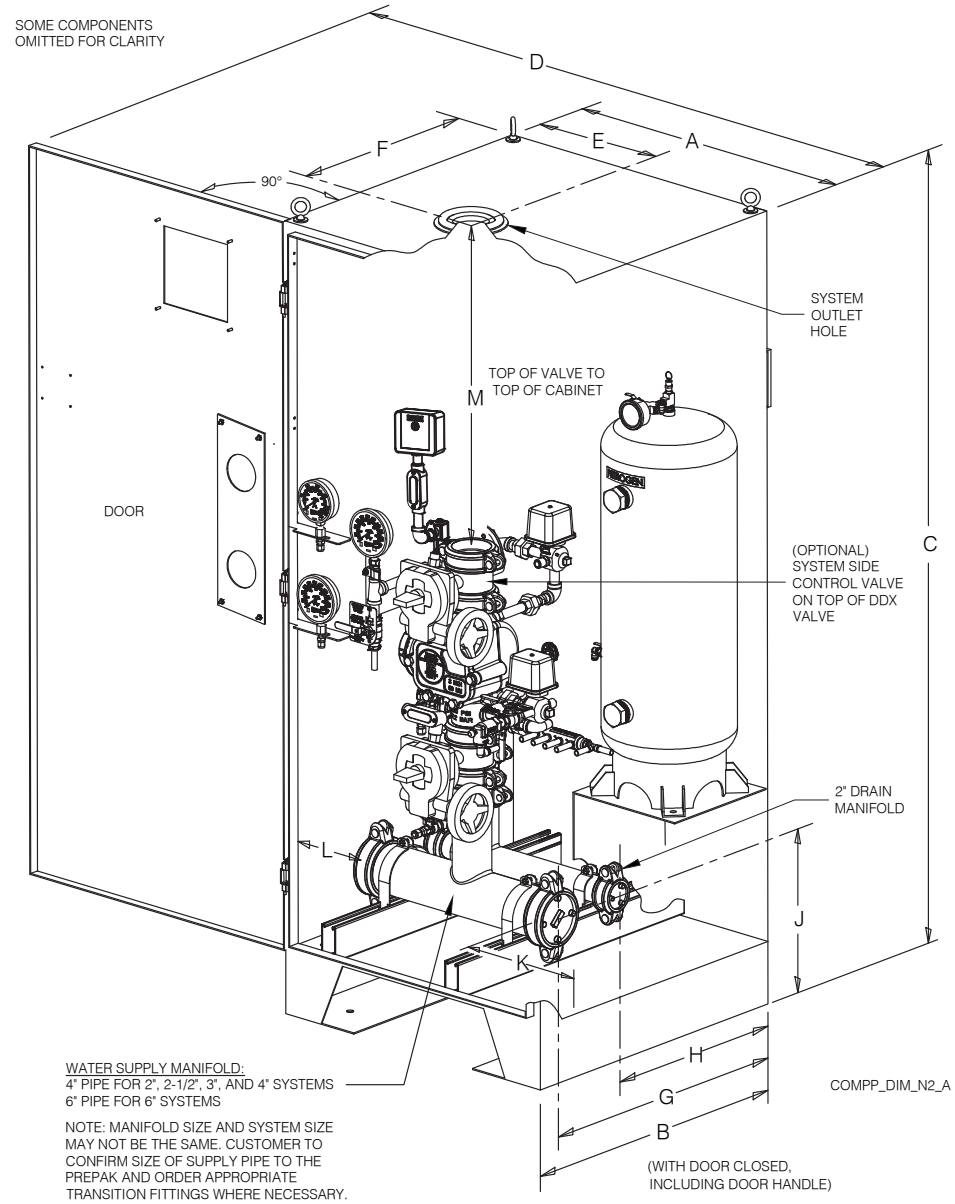

DDX PrePaK™ Type D Single/Double Interlock Preaction, Electric

Technical Specifications
System Sizes: 2” (50mm), 2-1/2” (65mm), 3” (80mm), 4” (100mm), 6” (150mm), and 8” (200mm)
Manifold Size: 4” (100mm) for sizes up to 4”, 8” (200mm) for 6” (150mm) and 8” (200mm) systems
Drain Manifold Size: 2” (50mm) for all systems

Minimum Required Pressure: 20 psi (1.4 bar)
Maximum Working Pressure: 175 psi (12 bar) or 250 psi (17.2 bar) depending on solenoid selection

Minimum Water Temperature: 40°F (4°C)
Maximum Water Temperature: 140°F (60°C)

Releasing Devices(s):
- Parker Hannifin 73218BN4UNLVNOC111C2, 24 VDC, 10 watt solenoid valve rated at 175 psi (12 bar)
- (Alternate) Parker Hannifin 73212BN4TNLVNOC322C2, 24 VDC, 22 watt solenoid rated at 300 psi (20.0 bar)

Friction Loss (Equivalent Length of Schedule 40 Pipe, C-Factor = 120, including manifold)

2” (50mm)	19.4 ft (5.9 m)
2-1/2” (65mm)	24.5 ft (7.5 m)
3” (80mm)	28.9 ft (8.8 m)
4” (100mm)	32.8 ft (17.7 m)
6” (150mm)	54.7 ft (21.8 m)
8” (200mm)	79.3 ft (24.2 m)

Supervisory Air Pressure: 15 psi (1.03 bar) minimum

Approximate Weight:

2” (50mm), 2-1/2” (65mm), & 3” (80mm)	570 lbs (259 kg)
4” (100mm)	690 lbs (313 kg)
6” (150mm)	850 lbs (386 kg)
8” (200mm)	940 lbs (426 kg)

Approvals:
- cULus Listed as an assembled unit in the “Special System Water Control Valves Assembled Units” category (VKYL)
- FM Approved for applications where FM Global Data Sheets allow the use of double interlock preaction systems (when programmed as double interlock)
- FM Approved as a Refrigerated Area Sprinkler System in accordance with FM DS 2-0 (when programmed as double interlock)
- OSHPD Special Seismic Certification Preapproval (OSP) for SDS=2.50 and z/H=1 when installed with optional seismic kit



Representative photo.
Actual product may vary.

System Operation

The Reliable Model DDX Type D preaction system is an electric release system that incorporates a 24VDC normally closed solenoid valve on the deluge valve releasing trim. The solenoid valve is energized by a listed release control panel and detection system when the appropriate type and number of events have occurred to satisfy the panel program.

For single interlock preaction systems, the activation of a supplemental electric detection system, either on a single zone or two zones (cross zoned) will energize the solenoid, releasing water into the system and initiating a water flow alarm.

Note: Cross zone detection may only be used where specifically approved by the authority having jurisdiction.

For double interlock preaction systems, the activation of a supplemental electric detection system in conjunction with activation of the low-pressure switch due to loss of system pneumatic pressure (presumed due to a fire sprinkler opening) will energize the solenoid, releasing water into the system and initiating a water flow alarm.

In the event of pneumatic pressure loss on the system with no active electric detection, the pressure switch will operate independently, and a supervisory signal will report to the fire alarm system, however, water will not be released into the system.

This system, in sizes 2” through 6” (50 mm to 150 mm), is also available with an integral SouthTek Systems FPS-900 N2-Blast® nitrogen generator, FM Approved to Standard 1035, Nitrogen Generators for Corrosion Mitigation.

This system is also available with the optional General Air Products VPS system. Please reference page 18 of this document.

DDX PrePaK™ Type F Double Interlock Preaction System, Electric/Pneumatic Release

Technical Specifications
System Sizes: 2” (50mm), 2-1/2” (65mm), 3” (80mm), 4” (100mm), 6” (150mm), and 8” (200mm)
Manifold Size: 4” (100mm) for sizes up to 4”, 8” (200mm) for 6” (150mm) and 8” (200mm) systems
Drain Manifold Size: 2” (50mm) for all systems

Minimum Required Pressure: 20 psi (1.4 bar)
Maximum Working Pressure: 175 psi (12 bar) or 250 psi (17.2 bar) depending on solenoid selection

Releasing Devices(s):
- (Standard) Parker Hannifin 73218BN4UNLVNOC111C2, 24 VDC, 10 watt solenoid valve rated at 175 psi (12 bar)
- (Alternate) Parker Hannifin 73212BN4TNLVNOC322C2, 24 VDC, 22 watt solenoid rated at 300 psi (20.0 bar)
- Model LP Low Pressure Dry Pilot Actuator (Secondary)

Minimum Water Temperature: 40°F (4°C)
Maximum Water Temperature: 140°F (60°C)

Friction Loss (Equivalent Length of Schedule 40 Pipe, C-Factor = 120, including manifold)

2” (50mm)	19.4 ft (5.9 m)
2-1/2” (65mm)	24.5 ft (7.5 m)
3” (80mm)	28.9 ft (8.8 m)
4” (100mm)	32.8 ft (17.7 m)
6” (150mm)	54.7 ft (21.8 m)
8” (200mm)	79.3 ft (24.2 m)

Supervisory Air Pressure: 8 psi (0.6 bar) to 24 psi (1.7 bar) depending on incoming water supply pressure. See Installation, Operation, and Maintenance Manual (Bulletin 761).

Approximate Weight:

2” (50mm), 2-1/2” (65mm), & 3” (80mm)	575 lbs (261 kg)
4” (100mm)	695 lbs (315 kg)
6” (150mm)	855 lbs (388 kg)
8” (200mm)	945 lbs (429 kg)

Approvals:
- cULus Listed as an assembled unit in the “Special System Water Control Valves Assembled Units” category (VKYL)
- FM Approved for applications where FM Global Data Sheets allow the use of double interlock preaction systems
- FM Approved as a Refrigerated Area Sprinkler System in accordance with FM DS 2-0
- OSHPD Special Seismic Certification Preapproval (OSP) for SDS=2.50 and z/H=1 when installed with optional seismic kit



Representative photo.
Actual product may vary.

System Operation

The Reliable Model DDX Type F double interlock preaction system is an electric/pneumatic release system that incorporates a 24VDC normally closed solenoid valve in series with a Model LP low-pressure dry pilot actuator on the deluge valve releasing trim.

The activation of a supplemental electric detection system, either on a single zone or two zones (cross zoned) will energize the solenoid valve. Subsequent operation of the low-pressure dry pilot actuator due to loss of system pneumatic pressure (presumed due to a fire sprinkler opening) releases water into the system and initiates a water flow alarm.

Note: Cross zone detection may only be used where specifically approved by the authority having jurisdiction.

In the event of pneumatic pressure loss on the system with no active electric detection, the pressure switch will operate independently, and a supervisory signal will report to the fire alarm system, however, water will not be released into the system.

This system, in sizes 2” through 6” (50 mm to 150 mm), is also available with an integral SouthTek Systems FPS-900 N2-Blast® nitrogen generator, FM Approved to Standard 1035, Nitrogen Generators for Corrosion Mitigation.

This system is also available with the optional General Air Products VPS system. Please reference page 18 of this document.

DDX PrePaK™ Type DDX-LP Low Pressure Dry Pipe System

Technical Specifications
System Sizes: 2” (50mm), 2-1/2” (65mm), 3” (80mm), 4” (100mm), 6” (150mm), and 8” (200mm)
Manifold Size: 4” (100mm) for sizes up to 4”, 8” (200mm) for 6” (150mm) and 8” (200mm) systems
Drain Manifold Size: 2” (50mm) for all systems

Minimum Required Pressure: 20 psi (1.4 bar)
Maximum Working Pressure: 250 psi (17.2 bar)

Releasing Devices(s):
- Model LP Low Pressure Dry Pilot Actuator

Minimum Water Temperature: 40°F (4°C)
Maximum Water Temperature: 140°F (60°C)

Friction Loss (Equivalent Length of Schedule 40 Pipe, C-Factor = 120, including manifold)

2” (50mm)	19.4 ft (5.9 m)
2-1/2” (65mm)	24.5 ft (7.5 m)
3” (80mm)	28.9 ft (8.8 m)
4” (100mm)	32.8 ft (17.7 m)
6” (150mm)	54.7 ft (21.8 m)
8” (200mm)	79.3 ft (24.2 m)

Supervisory Air Pressure: 8 psi (0.6 bar) to 24 psi (1.7 bar) depending on incoming water supply pressure. See Installation, Operation, and Maintenance Manual (Bulletin 761).

Approximate Weight:

2” (50mm), 2-1/2” (65mm), & 3” (80mm)	570 lbs (259 kg)
4” (100mm)	690 lbs (313 kg)
6” (150mm)	850 lbs (386 kg)
8” (200mm)	940 lbs (426 kg)

Approvals:
- cULus Listed as an assembled unit in the “Special System Water Control Valves Assembled Units” category (VKYL)
- FM Approved
- OSHPD Special Seismic Certification Preapproval (OSP) for SDS=2.50 and z/H=1 when installed with optional seismic kit



Representative photo.
Actual product may vary.

System Operation

The Reliable Model DDX-LP is a dry pipe system that incorporates a low-pressure dry pilot actuator on the deluge valve releasing trim.

The Model LP dry pilot actuator is diaphragm operated valve that is normally held closed using the same air or nitrogen pressure contained in the dry pipe system. Loss of pneumatic pressure in the system (presumed due to a fire sprinkler operating) results in the opening of the dry pilot actuator and deluge valve, releasing water into the system and initiating a water flow alarm.

In the event of a slow loss of pneumatic pressure (such as a leak), the pressure switch will operate, and a supervisory signal will report to the fire alarm system.

Note: Failure to address a low-pressure condition may result in operation of the dry pipe system.

This system, in sizes 2” through 6” (50 mm to 150 mm), is also available with an integral SouthTek Systems FPS-900 N2-Blast® nitrogen generator, FM Approved to Standard 1035, Nitrogen Generators for Corrosion Mitigation.

This system is also available with the optional General Air Products VPS system. Please reference page 18 of this document.

DDX PrePaK™ Type DDX Deluge System, Wet Pilot Line Release

Technical Specifications
System Sizes: 2” (50mm), 2-1/2” (65mm), 3” (80mm), 4” (100mm), 6” (150mm), and 8” (200mm)
Manifold Size: 4” (100mm) for sizes up to 4”, 8” (200mm) for 6” (150mm) and 8” (200mm) systems
Drain Manifold Size: 2” (50mm) for all systems

Minimum Required Pressure: 20 psi (1.4 bar)
Maximum Working Pressure: 175 psi (12 bar) or 250 psi (17.2 bar) depending on rating of pilot line detectors

Releasing Devices(s):
- Wet Pilot Line Detection

Minimum Water Temperature: 40°F (4°C)
Maximum Water Temperature: 140°F (60°C)

Friction Loss (Equivalent Length of Schedule 40 Pipe, C-Factor = 120, including manifold)

2” (50mm)	19.4 ft (5.9 m)
2-1/2” (65mm)	24.5 ft (7.5 m)
3” (80mm)	28.9 ft (8.8 m)
4” (100mm)	32.8 ft (17.7 m)
6” (150mm)	54.7 ft (21.8 m)
8” (200mm)	79.3 ft (24.2 m)

Approximate Weight:

2” (50mm), 2-1/2” (65mm), & 3” (80mm)	560 lbs (254 kg)
4” (100mm)	680 lbs (308 kg)
6” (150mm)	840 lbs (381 kg)
8” (200mm)	930 lbs (422 kg)

Approvals:
- cULus Listed as an assembled unit in the “Special System Water Control Valves Assembled Units” category (VKYL)
- FM Approved
- OSHPD Special Seismic Certification Preapproval (OSP) for SDS=2.50 and z/H=1 when installed with optional seismic kit



Representative photo.
Actual product may vary.

System Operation

The Reliable Model DDX deluge system with wet pilot trim is a mechanical release system that incorporates a hydraulic pilot (detection) line directly connected to the deluge valve releasing trim. This system does not incorporate an electric detection and release system.

The activation of a thermal detector or manual release on the wet pilot detection line directly relieves hydraulic pressure on the deluge valve releasing trim, releasing water into the system and initiating a water flow alarm.

Caution: Wet pilot lines are limited by length and/or height based upon the available water supply. See Installation, Operation, and Maintenance Manual (Bulletin 761).

Deluge systems utilize open sprinklers, nozzles, or other discharge devices. As such, deluge systems do not utilize compressed air or nitrogen in the piping network.

DDX PrePaK™ Type DDX Deluge System, Dry Pilot Line Release

Technical Specifications

System Sizes: 2" (50mm), 2-1/2" (65mm), 3" (80mm), 4" (100mm), 6" (150mm), and 8" (200mm)
Manifold Size: 4" (100mm) for sizes up to 4", 8" (200mm) for 6" (150mm) and 8" (200mm) systems
Drain Manifold Size: 2" (50mm) for all systems

Minimum Required Pressure: 20 psi (1.4 bar)
Maximum Working Pressure: 175 psi (12 bar) or 250 psi (17.2 bar) depending on rating of pilot line detectors

Releasing Devices(s):
- Dry Pilot Line Detection using Model LP Low Pressure Dry Pilot Actuator

Minimum Water Temperature: 40°F (4°C)
Maximum Water Temperature: 140°F (60°C)

Friction Loss (Equivalent Length of Schedule 40 Pipe, C-Factor = 120, including manifold)

2" (50mm)	19.4 ft (5.9 m)
2-1/2" (65mm)	24.5 ft (7.5 m)
3" (80mm)	28.9 ft (8.8 m)
4" (100mm)	32.8 ft (17.7 m)
6" (150mm)	54.7 ft (21.8 m)
8" (200mm)	79.3 ft (24.2 m)

Supervisory Air Pressure: 8 psi (0.6 bar) to 24 psi (1.7 bar) depending on incoming water supply pressure. See Installation, Operation, and Maintenance Manual (Bulletin 761).

Approximate Weight:

2" (50mm), 2-1/2" (65mm), & 3" (80mm)	570 lbs (259 kg)
4" (100mm)	690 lbs (313 kg)
6" (150mm)	850 lbs (386 kg)
8" (200mm)	940 lbs (426 kg)

Approvals:
- cULus Listed as an assembled unit in the "Special System Water Control Valves Assembled Units" category (VKYL)
- FM Approved
- OSHPD Special Seismic Certification Preapproval (OSP) for SDS=2.50 and z/H=1 when installed with optional seismic kit



Representative photo.
Actual product may vary.

System Operation

The Reliable Model DDX deluge system with dry pilot trim is a mechanical release system that incorporates a pneumatic pilot (detection) line connected to the deluge valve releasing trim. The Model LP dry pilot actuator serves to separate the dry pilot piping from the hydraulic pressure in the deluge valve releasing trim. This system does not incorporate an electric detection and release system.

The Model LP dry pilot actuator is diaphragm operated valve that is normally held closed using the air or nitrogen pressure. Loss of pneumatic pressure in the pilot line (presumed due to a thermal detector or manual release operating) results in the operation of the dry pilot actuator. Operation of the actuator relieves hydraulic pressure on the deluge valve releasing trim, releasing water into the system and initiating a water flow alarm.

In the event of a slow loss of pneumatic pressure (such as a leak) on the dry pilot line, the pressure switch will operate, and a supervisory signal will report to the fire alarm system.

Note: Failure to address a low-pressure condition may result in operation of the dry pipe system.

Deluge systems utilize open sprinklers, nozzles, or other discharge devices. As such, deluge systems do not utilize compressed air or nitrogen in the piping network, however, compressed air or nitrogen is required for the dry pilot line. Dry pilot lines are not limited by length and/or height.

DDX PrePaK™ Type DDX Deluge System, Electric Release

Technical Specifications
System Sizes: 2" (50mm), 2-1/2" (65mm), 3" (80mm), 4" (100mm), 6" (150mm), and 8" (200mm)
Manifold Size: 4" (100mm) for sizes up to 4", 8" (200mm) for 6" (150mm) and 8" (200mm) systems
Drain Manifold Size: 2" (50mm) for all systems

Minimum Required Pressure: 20 psi (1.4 bar)
Maximum Working Pressure: 175 psi (12 bar) or 250 psi (17.2 bar) depending on solenoid selection

Releasing Devices(s):
- (Standard) Parker Hannifin 73218BN4UNLVNOC111C2, 24 VDC, 10 watt solenoid valve rated at 175 psi (12 bar)
- (Alternate) Parker Hannifin 73212BN4TNLVNOC322C2, 24 VDC, 22 watt solenoid rated at 300 psi (20.0 bar)

Minimum Water Temperature: 40°F (4°C)
Maximum Water Temperature: 140°F (60°C)

Friction Loss (Equivalent Length of Schedule 40 Pipe, C-Factor = 120, including manifold)

2" (50mm)	19.4 ft (5.9 m)
2-1/2" (65mm)	24.5 ft (7.5 m)
3" (80mm)	28.9 ft (8.8 m)
4" (100mm)	32.8 ft (17.7 m)
6" (150mm)	54.7 ft (21.8 m)
8" (200mm)	79.3 ft (24.2 m)

Approximate Weight:

2" (50mm), 2-1/2" (65mm), & 3" (80mm)	565 lbs (256 kg)
4" (100mm)	685 lbs (311 kg)
6" (150mm)	845 lbs (383 kg)
8" (200mm)	935 lbs (424 kg)

Approvals:
- cULus Listed as an assembled unit in the "Special System Water Control Valves Assembled Units" category (VKYL)
- FM Approved
- OSHPD Special Seismic Certification Preapproval (OSP) for SDS=2.50 and z/H=1 when installed with optional seismic kit



Representative photo.
Actual product may vary.

System Operation

The Reliable Model DDX deluge system with electric trim is an electric release system that incorporates a 24VDC normally closed solenoid valve on the releasing trim. The solenoid valve is energized by a listed release control panel and detection system when the appropriate type and number of events have occurred to satisfy the panel program.

The activation of a supplemental electric detection system, either on a single zone or two zones (cross zoned) will energize the solenoid, releasing water into the system and initiating a water flow alarm.

Note: Cross zone detection may only be used where specifically approved by the authority having jurisdiction.

Deluge systems utilize open sprinklers, nozzles, or other discharge devices. As such, deluge systems do not utilize compressed air or nitrogen in the piping network.

DDX PrePaK™ Type DDX Single Interlock Preaction System, Dry Pilot Line Release

Technical Specifications
System Sizes: 2" (50mm), 2-1/2" (65mm), 3" (80mm), 4" (100mm), 6" (150mm), and 8" (200mm)
Manifold Size: 4" (100mm) for sizes up to 4", 8" (200mm) for 6" (150mm) and 8" (200mm) systems
Drain Manifold Size: 2" (50mm) for all systems

Minimum Required Pressure: 20 psi (1.4 bar)
Maximum Working Pressure: 175 psi (12 bar) or 250 psi (17.2 bar) depending on rating of pilot line detectors

Releasing Devices(s):
- Dry Pilot Line Detection using Model LP Low Pressure Dry Pilot Actuator

Minimum Water Temperature: 40°F (4°C)
Maximum Water Temperature: 140°F (60°C)

Friction Loss (Equivalent Length of Schedule 40 Pipe, C-Factor = 120, including manifold)

2" (50mm)	19.4 ft (5.9 m)
2-1/2" (65mm)	24.5 ft (7.5 m)
3" (80mm)	28.9 ft (8.8 m)
4" (100mm)	32.8 ft (17.7 m)
6" (150mm)	54.7 ft (21.8 m)
8" (200mm)	79.3 ft (24.2 m)

Supervisory Air Pressure: 8 psi (0.6 bar) to 24 psi (1.7 bar) depending on incoming water supply pressure. See Installation, Operation, and Maintenance Manual (Bulletin 761).

Approximate Weight:

2" (50mm), 2-1/2" (65mm), & 3" (80mm)	575 lbs (261 kg)
4" (100mm)	695 lbs (315 kg)
6" (150mm)	855 lbs (388 kg)
8" (200mm)	945 lbs (429 kg)

Approvals:
- cULus Listed as an assembled unit in the "Special System Water Control Valves Assembled Units" category (VKYL)
- FM Approved
- OSHPD Special Seismic Certification Preapproval (OSP) for SDS=2.50 and z/H=1 when installed with optional seismic kit



Representative photo.
Actual product may vary.

System Operation

The Reliable Model DDX single interlock preaction system with dry pilot trim is a mechanical release system that incorporates a pneumatic pilot (detection) line connected to the deluge valve releasing trim. The Model LP dry pilot actuator serves to separate the dry pilot piping from the hydraulic pressure in the deluge valve releasing trim. This system does not incorporate an electric detection and release system.

The Model LP dry pilot actuator is diaphragm operated valve that is normally held closed using the air or nitrogen pressure. Loss of pneumatic pressure in the pilot line (presumed due to a thermal detector or manual release operating) results in the operation of the dry pilot actuator. Operation of the actuator relieves hydraulic pressure on the deluge valve releasing trim, releasing water into the system and initiating a water flow alarm.

In the event of a slow loss of pneumatic pressure (such as a leak) on the dry pilot line, the pressure switch will operate, and a supervisory signal will report to the fire alarm system.

Note: Failure to address a low-pressure condition may result in operation of the deluge system.

Single interlock systems utilize closed discharge devices, and the system is supervised for integrity using pneumatic pressure. In the event of a slow loss of pneumatic pressure (such as a leak) on the system, the pressure switch will operate, and a supervisory signal will report to the fire alarm system, however, water will not be released into the system.

This system is also available with the optional General Air Products VPS system. Please reference page 18 of this document.

DDX PrePaK™ Type DDX Single Interlock Preaction System, Wet Pilot Line Release

Technical Specifications
System Sizes: 2” (50mm), 2-1/2” (65mm), 3” (80mm), 4” (100mm), 6” (150mm), and 8” (200mm)
Manifold Size: 4” (100mm) for sizes up to 4”, 8” (200mm) for 6” (150mm) and 8” (200mm) systems
Drain Manifold Size: 2” (50mm) for all systems

Minimum Required Pressure: 20 psi (1.4 bar)
Maximum Working Pressure: 175 psi (12 bar) or 250 psi (17.2 bar) depending on rating of pilot line detectors

Releasing Devices(s):
- Wet Pilot Line Detection

Minimum Water Temperature: 40°F (4°C)
Maximum Water Temperature: 140°F (60°C)

Friction Loss (Equivalent Length of Schedule 40 Pipe, C-Factor = 120, including manifold)

2” (50mm)	19.4 ft (5.9 m)
2-1/2” (65mm)	24.5 ft (7.5 m)
3” (80mm)	28.9 ft (8.8 m)
4” (100mm)	32.8 ft (17.7 m)
6” (150mm)	54.7 ft (21.8 m)
8” (200mm)	79.3 ft (24.2 m)

Supervisory Air Pressure: 15 psi (1.03 bar) minimum

Approximate Weight:

2” (50mm), 2-1/2” (65mm), & 3” (80mm)	570 lbs (259 kg)
4” (100mm)	690 lbs (313 kg)
6” (150mm)	850 lbs (386 kg)
8” (200mm)	940 lbs (426 kg)

Approvals:
- cULus Listed as an assembled unit in the “Special System Water Control Valves Assembled Units” category (VKYL)
- FM Approved
- OSHPD Special Seismic Certification Preapproval (OSP) for SDS=2.50 and z/H=1 when installed with optional seismic kit



Representative photo.
Actual product may vary.

System Operation

The Reliable Model DDX single interlock preaction system with wet pilot trim is a mechanical release system that incorporates a hydraulic pilot (detection) line directly connected to the deluge valve releasing trim. This system does not incorporate an electric detection and release system.

Caution: Wet pilot lines are limited by length and/or height based upon the available water supply. Refer to Technical Bulletin 760 for further information.

The activation of a thermal detector or manual release on the wet pilot detection line directly relieves hydraulic pressure on the deluge valve releasing trim, releasing water into the system and initiating a water flow alarm.

Single interlock systems utilize closed discharge devices, and the system is supervised for integrity using pneumatic pressure. In the event of a slow loss of pneumatic pressure (such as a leak) on the system, the pressure switch will operate, and a supervisory signal will report to the fire alarm system, however, water will not be released into the system.

Note: Failure to address a low-pressure condition may result in unwanted discharge of water should the deluge valve subsequently operate due to a wet pilot line detection event.

This system is also available with the optional General Air Products VPS system. Please reference page 18 of this document.

DDX PrePaK™ Type PL Double Interlock Preaction System, Pneumatic/Pneumatic Release

Technical Specifications
System Sizes: 2" (50mm), 2-1/2" (65mm), 3" (80mm), 4" (100mm), 6" (150mm), and 8" (200mm)
Manifold Size: 4" (100mm) for sizes up to 4", 8" (200mm) for 6" (150mm) and 8" (200mm) systems
Drain Manifold Size: 2" (50mm) for all systems

Minimum Required Pressure: 20 psi (1.4 bar)
Maximum Working Pressure: 175 psi (12 bar) or 250 psi (17.2 bar) depending on rating of pilot line detectors

Releasing Devices(s):
- Model LPDI (Dual Chamber) Low Pressure Dry Pilot Actuator

Minimum Water Temperature: 40°F (4°C)
Maximum Water Temperature: 140°F (60°C)

Friction Loss (Equivalent Length of Schedule 40 Pipe, C-Factor = 120, including manifold)

2" (50mm)	19.4 ft (5.9 m)
2-1/2" (65mm)	24.5 ft (7.5 m)
3" (80mm)	28.9 ft (8.8 m)
4" (100mm)	32.8 ft (17.7 m)
6" (150mm)	54.7 ft (21.8 m)
8" (200mm)	79.3 ft (24.2 m)

Supervisory Air Pressure: 8 psi (0.6 bar) to 24 psi (1.7 bar) depending on incoming water supply pressure. See Installation, Operation, and Maintenance Manual (Bulletin 761).

Approximate Weight:

2" (50mm), 2-1/2" (65mm), & 3" (80mm)	585 lbs (265 kg)
4" (100mm)	705 lbs (320 kg)
6" (150mm)	865 lbs (392 kg)
8" (200mm)	955 lbs (433 kg)

Approvals:
- cULus Listed as an assembled unit in the "Special System Water Control Valves Assembled Units" category (VKYL)
- FM Approved for applications where FM Global Data Sheets allow the use of double interlock preaction systems
- FM Approved as a Refrigerated Area Sprinkler System in accordance with FM DS 2-0
- OSHPD Special Seismic Certification Preapproval (OSP) for SDS=2.50 and z/H=1 when installed with optional seismic kit



Representative photo.
Actual product may vary.

System Operation

The Reliable Model DDX Type PL double interlock preaction system is a fully mechanical system that incorporates a dual-chamber low-pressure dry pilot actuator on the deluge valve releasing trim. Both chambers of the dry pilot actuator must depressurize for the system to operate. The Model PL dry pilot actuator serves to separate the dry pilot piping and system piping from the hydraulic pressure in the deluge valve releasing trim. This system does not incorporate an electric detection and release system.

In the event of pneumatic pressure loss on the dry pilot line (presumed due to operation of a thermal detector, manual station, or substantial leak) the dry pilot line pressure switch will report to the fire alarm system, however, water will not be released into the system. Subsequent loss of pneumatic pressure on the system (presumed due to a fire sprinkler opening) will operate the Model PL dry pilot actuator, releasing water into the system and initiating a water flow alarm.

In the event of pneumatic pressure loss on the system, the system pressure switch will operate and report to the fire alarm system, however, water will not be released into the system.

Note: Failure to address a system low-pressure condition may result in unwanted discharge of water should the deluge valve subsequently operate due to a dry pilot line detection event.

This system is also available with the optional General Air Products VPS system. Please reference page 18 of this document.

DDX PrePaK™ Type DDX Non-Interlock Preaction System

Technical Specifications
System Sizes: 2” (50mm), 2-1/2” (65mm), 3” (80mm), 4” (100mm), 6” (150mm), and 8” (200mm)
Manifold Size: 4” (100mm) for sizes up to 4”, 8” (200mm) for 6” (150mm) and 8” (200mm) systems
Drain Manifold Size: 2” (50mm) for all systems

Minimum Required Pressure: 20 psi (1.4 bar) (Note higher minimum water pressure.)
Maximum Working Pressure: 175 psi (12 bar) or 250 psi (17.2 bar) depending on solenoid selection

Releasing Devices(s):
- (Standard) Parker Hannifin 73218BN4UNLVNOC111C2, 24 VDC, 10 watt solenoid valve rated at 175 psi (12 bar)
- (Alternate) Parker Hannifin 73212BN4TNLVNOC322C2, 24 VDC, 22 watt solenoid rated at 300 psi (20.0 bar)
- Model LP Low Pressure Dry Pilot Actuator

Minimum Water Temperature: 40°F (4°C)
Maximum Water Temperature: 140°F (60°C)

Friction Loss (Equivalent Length of Schedule 40 Pipe, C-Factor = 120, including manifold)

2” (50mm)	19.4 ft (5.9 m)
2-1/2” (65mm)	24.5 ft (7.5 m)
3” (80mm)	28.9 ft (8.8 m)
4” (100mm)	32.8 ft (17.7 m)
6” (150mm)	54.7 ft (21.8 m)
8” (200mm)	79.3 ft (24.2 m)

Supervisory Air Pressure: 8 psi (0.6 bar) to 24 psi (1.7 bar) depending on incoming water supply pressure. See Installation, Operation, and Maintenance Manual (Bulletin 761).

Approximate Weight:

2” (50mm), 2-1/2” (65mm), & 3” (80mm)	565 lbs (256 kg)
4” (100mm)	685 lbs (311 kg)
6” (150mm)	845 lbs (383 kg)
8” (200mm)	935 lbs (424 kg)

Approvals:
- cULus Listed as an assembled unit in the “Special System Water Control Valves Assembled Units” category (VKYL)
- OSHPD Special Seismic Certification Preapproval (OSP) for SDS=2.50 and z/H=1 when installed with optional seismic kit



Representative photo.
Actual product may vary.

System Operation

The Reliable Model DDX Non-Interlock preaction system is a specialized system that operates individually as either an electric release single interlock system or a low pressure dry pipe system. The system incorporates a 24VDC normally closed solenoid valve and a Model LP low-pressure dry pilot actuator on the deluge valve releasing trim. The releasing devices are not in series, but rather are parallel such that opening of either device will release water into the system.

When operating as a single interlock system, activation of a supplemental electric detection system, either on a single zone or two zones (cross zoned) will energize the solenoid valve, release water into the system, and initiate a water flow alarm.

The Model LP dry pilot actuator is diaphragm operated valve that is normally held closed using the same air or nitrogen pressure contained in the dry pipe system. When operating as a low pressure dry pipe system, loss of pneumatic pressure in the system (presumed due to a fire sprinkler operating) results in the opening of the dry pilot actuator which releases water into the system and initiates a water flow alarm.

In the event of a slow loss of pneumatic pressure (such as a leak), the pressure switch will operate, and a supervisory signal will report to the fire alarm system.

Notes:
1. Cross zone detection may only be used where specifically approved by the authority having jurisdiction.
2. Failure to address a low-pressure condition may result in operation of the non-interlock system.

This system is also available with the optional General Air Products VPS system. Please reference page 18 of this document.

DDX PrePaK™ DDX-LP Low Pressure Dry to Type F Double Interlock Convertible

Technical Specifications
System Sizes: 2” (50mm), 2-1/2” (65mm), 3” (80mm), 4” (100mm), 6” (150mm), and 8” (200mm)
Manifold Size: 4” (100mm) for sizes up to 4”, 8” (200mm) for 6” (150mm) and 8” (200mm) systems
Drain Manifold Size: 2” (50mm) for all systems

Minimum Required Pressure: 20 psi (1.4 bar)
Maximum Working Pressure: 175 psi (12 bar) or 250 psi (17.2 bar) depending on solenoid selection

Releasing Devices(s):
- (Standard) Parker Hannifin 73218BN4UNLVNOC111C2, 24 VDC, 10 watt solenoid valve rated at 175 psi (12 bar)
- (Alternate) Parker Hannifin 73212BN4TNLVNOC322C2, 24 VDC, 22 watt solenoid rated at 300 psi (20.0 bar)
- Model LP Low Pressure Dry Pilot Actuator (Secondary)

Minimum Water Temperature: 40°F (4°C)
Maximum Water Temperature: 140°F (60°C)

Friction Loss (Equivalent Length of Schedule 40 Pipe, C-Factor = 120, including manifold)

2” (50mm)	19.4 ft (5.9 m)
2-1/2” (65mm)	24.5 ft (7.5 m)
3” (80mm)	28.9 ft (8.8 m)
4” (100mm)	32.8 ft (17.7 m)
6” (150mm)	54.7 ft (21.8 m)
8” (200mm)	79.3 ft (24.2 m)

Supervisory Air Pressure: 8 psi (0.6 bar) to 24 psi (1.7 bar) depending on incoming water supply pressure. See Installation, Operation, and Maintenance Manual (Bulletin 761).

Approximate Weight:

2” (50mm), 2-1/2” (65mm), & 3” (80mm)	575 lbs (261 kg)
4” (100mm)	695 lbs (315 kg)
6” (150mm)	855 lbs (388 kg)
8” (200mm)	945 lbs (429 kg)

Approvals:
- cULus Listed as an assembled unit in the “Special System Water Control Valves Assembled Units” category (VKYL)
- Following conversion, FM Approved for applications where FM Global Data Sheets allow the use of double interlock preaction systems
- Following Conversion, FM Approved as a Refrigerated Area Sprinkler System in accordance with FM DS 2-0
- OSHPD Special Seismic Certification Preapproval (OSP) for SDS=2.50 and z/H=1 when installed with optional seismic kit



Representative photo.
Actual product may vary.

System Operation

The Reliable Model DDX-LP to Type F Double Interlock Convertible system is initially assembled as a DDX-LP Low pressure dry system, and contains the necessary components provided for conversion to a Model DDX Type F Electric/ Pneumatic double interlock system.

Operation of this unit as a dry pipe system can be found on page 6 of this document. Operation of this unit, following conversion to a Type F double interlock system, can be found on page 5 of this document. Full instructions on making the conversion can be found in the Installation, Operation, and Maintenance Manual (Bulletin 761).

This system, in sizes 2” through 6” (50 mm to 150 mm), is also available with an integral SouthTek Systems FPS-900 N2-Blast® nitrogen generator, FM Approved to Standard 1035, Nitrogen Generators for Corrosion Mitigation.

This system is also available with the optional General Air Products VPS system. Please reference page 18 of this document.

Options (also Reference pages 16, 17, &18)

Based upon the type of system, some or all of the following optional equipment is available.

1. Solenoid Valve: 300 psi rated [Default is 175 psi rated]
2. Coil supervisory device: Potter Electric CoilKeeper™ [Default is NO device]
3. Releasing Control Panel: Potter Electric PFC-4410G3 with integral releasing circuit disable switch. [Default is NO panel]
4. Tank-Mounted Air Compressor: 1/2 HP, 1 HP, or 1.5 HP/115 or 220 VAC 60 Hz/220 VAC 50 Hz [Default is NO compressor]
5. Air Devices: Nitrogen cylinder supply kit, nitrogen cylinder supply kit with B-1 accelerator, NS-ASAM, NS-ASAM with B-1 accelerator, B-1 accelerator only, desiccant kit, desiccant kit with B-1 accelerator, nitrogen generator, nitrogen generator with B-1 accelerator [Default is Model A Pressure Maintenance Device only, or NO Device for Deluge Systems]

Notes:

1. Refer to technical bulletin 718 for solenoid valve information.
2. Customer supplied releasing control panels must be compatible with Reliable supplied solenoid valves and must incorporate a method of temporarily disabling the releasing circuit for testing.
3. Selection of air compressor is based upon system capacity, system pressure, and allowable fill time. Refer to technical bulletin 256 for 1/2 HP and 1 HP (QRM2) air compressors; refer to General Air Products for 1-1/2 HP (OL915150AC) air compressor.
4. Refer to technical bulletin 254 for additional information on nitrogen cylinder supply kit and NS-ASAM multiple-source panel.
5. Refer to technical bulletin 323 for additional information on Model B-1 accelerator.
6. Refer to publication SouthTek Operation Manual for additional information on nitrogen generator.
7. Air compressor sizes for units equipped with nitrogen generator are limited to 1/2 and 1 HP only, 110 or 220 VAC 60 Hz only.
8. Refer to publication Vapor Pipe Shield_IOM for additional information on Vapor Pipe Shield system.

Installation

Reliable Model DDX PrePaKs shall be installed in accordance with NFPA 13, “Standard for the Installation of Sprinkler Systems,” as well as the requirements of any authorities having jurisdiction. Failure to follow installation instructions and/or revisions to the product may void the warranty and listing of the system. Verify compatibility of the Model DDX PrePaK materials with the water supply and the environment where the product will be installed prior to installation. The Model DDX PrePaK valve must be installed in a location where the temperature is maintained as a minimum of 40°F (4°C). Heat tracing of components is not permitted. Drain should be piped to a location that will avoid damage to property and injury to personnel.

Design and installation of the detection and release system must be performed in accordance with applicable NFPA standards and the authority having jurisdiction.

Maintenance

The owner is responsible for maintaining the fire protection system in proper operating condition. Any system maintenance or testing that involves placing a control valve or detection/control system out of service may eliminate the fire protection that is provided by the fire protection system. The Reliable Model DDX PrePaK and associated equipment shall periodically be given a thorough inspection and test. NFPA 25, “Inspection, Testing and Maintenance of Water Based Fire Protection Systems,” provides minimum maintenance requirements. System components shall be tested, operated, cleaned, and inspected at least annually, and parts replaced as required.

Additional information can be found on the Installation, Operation, and Maintenance Manual (Bulletin 761).

Guarantee

For Reliable Automatic Sprinkler Co., Inc. guarantee, terms, and conditions, visit www.reliablesprinkler.com.

Ordering Information

See next page. Replace alpha character in the table header with appropriate option selection in the related column to create the 10-digit production number.

For standard units see configurator 1 (Table B), for units with nitrogen generator see configurator 2 (Table C), and for units with the VPS system see configurator 3 (Table D).

Example:

PN 6554221290 would define a PrePaK (655; first three digits) that is 4” in size (U = 4) with a Type F double interlock system (V = 2) fitted with a 300-psi solenoid valve (W = 2), a Potter PFC-4410G3 control panel (X = 1), a 1 HP 115VAC 60HZ compressor (Y = 1 from lower section since Z = 9), an FPS-900 nitrogen generator with B-1 accelerator (Z = 9). The final character (0) is withheld for future use.

For assistance with option selection and configuration of production part number, please contact your local Reliable sales representative.

Note: Each Reliable Automatic Sprinkler Company PrePaK™ is custom manufactured to specific customer requirements. Field modifications that affect functionality of the system, including but not limited to altering the system type, adding devices or components, and removing factory installed devices or components, are strictly prohibited unless approved and/or performed by a Reliable Automatic Sprinkler Company authorized representative. Non-approved modifications performed by unauthorized personnel may void all guarantees, warranties, listings, and approvals.

1. Reliable PrePaK™ Part Number Configurator (Standard Units)

Table B

PrePaK	Size[1]	System Type	Solenoid[2][3]	Release Control Panel[5]	Air Compressor[6][7]	Air Devices[9][10]	Future
655	U	V	W	X	Y	Z	0
	2 = 2"	1 = Type D Single/ Double Interlock Preaction	0 = Not required	0 = No control panel	0 = None[8]	0 = Model A PMD (or None for Deluge)	
	0 = 2-1/2"	2 = Type F Double Interlock Preaction	1 = 175 psi rated	1 = Potter PFC-4410G3	1 = 1/2 hp 115vac 60hz QRM2-50115T	1 = Nitrogen cylinder supply kit	
	3 = 3"	3 = DDX LP (Low Pressure) Dry	2 = 300 psi rated	2 = Potter PFC-4410G3 with RLY-5 module	2 = 1 hp 115vac 60hz QRM2-100115T	2 = Nitrogen cylinder supply kit & B-1 accelerator	
	4 = 4"	4 = Wet Pilot Line Deluge	5 = 175 psi rated with coil supervisory switch[4]	3 = Potter PFC-4410G3 with IDC-6 module	3 = 1-1/2 hp 115vac 60hz GAP OL915150AC	3 = NS-ASAM	
	6 = 6"	5 = Dry Pilot Line Deluge	6 = 300 psi rated with coil supervisory switch[4]	4 = Potter PFC-4410G3 with CA-4064 module	4 = 1/2 hp 220vac 60hz QRM2-50220T	4 = NS-ASAM & B-1 accelerator	
	8 = 8"	6 = Electric Release Deluge		5 = Potter PFC-4410G3 with IDC-6 & CA-4064 modules	5 = 1 hp 220vac 60hz QRM2-100220T	5 = B-1 accelerator	
	A = 2" with system side control valve	7 = Single Interlock Dry Pilot Line		6 = Potter PFC-4410G3 with CA-4064 & RLY-5 modules	6 = 1-1/2 hp 220vac 60hz GAP OL915150AC	6 = Desiccant Kit	
	B = 2-1/2" with system side control valve	8 = Single Interlock Wet Pilot Line		7 = Potter PFC-4410G3 with IDC-6 & RLY-5 modules	7 = 1/2 hp 220vac 50hz QRM2-50220T-50hz	7 = Desiccant Kit & B-1 accelerator	
	C = 3" with system side control valve	9 = Type PL Double Interlock Preaction		**Note:** Module options 2 through 7 above will require additional field wiring within the release control panel. These module terminals are NOT mapped to the auxiliary terminal junction box.	8 = 1 hp 220vac 50hz QRM2-100220T-50hz	**Note:** Pressure maintenance device is provided for all system types except deluge types 4 and 6 that do not utilize pressurized air or nitrogen	
	D = 4" with system side control valve	C = Non-Interlock Preaction			9 = 1-1/2 hp 220vac 50hz GAP OL2870150AC-50		
	E = 6" with system side control valve	D = DDX-LP to Type F Preaction Convertible					
	F = 8" with system side control valve						

Notes:

1. Manifold size may differ from system size. Customer to confirm size of supply pipe to PrePaK™ and provide appropriate transition fittings/couplings if necessary (see pages 2 and 3 of this document).
2. "W" must be "0" when "V" is 3, 4, 5, 7, 8, or 9. (Solenoid valve is only used with system types 1, 2, 6, C, and D.)
3. Reference technical bulletin 718 for solenoid model numbers and details.
4. cULus listed Potter Electric Signal Company CoilKeeper™. (In accordance with NFPA 13 2019 edition, effective January 1, 2021, all systems incorporating an electric solenoid shall be capable of providing an audible and visual indication of system impairment should the actuator be removed from the deluge or preaction system trim.)
5. If "0 = None" option is selected, customer to provide separate UL and/or FM release control panel for systems utilizing electric solenoid release. Panel must be compatible with the Parker Hannifin solenoid valve provided with the unit and include a method to temporarily disable the releasing circuit for testing.
6. Air compressor is not used when "V" (system type) is 4 or 6 (deluge wet pilot and deluge electric).
7. Air compressor selection depends on system size and normal system pressure; customer to specify. **Note:** 1.5 HP compressors may only be ordered with 6" and 8" systems.
8. If "0 = None" option is selected, customer to provide separate compressed air or nitrogen source.
9. Use "0 = Model A PMD" for systems utilizing a separate compressor or separate nitrogen generator. Connect to inlet side of Model A Pressure Maintenance Device. **Note:** Compressor or nitrogen generator must incorporate a tank.
10. Air device "Z" options 2, 4, 5, and 7 (B-1 accelerator) is not available when system type "V" is 1, 4, 5, 6, 7, or 8. Accelerator is only used with system types 2, 3, 9, C, and D.

Optional Seismic Kit (order separately): Seismic upgrade kit, Reliable part number 6501200041 (for 30" x 33" cabinet; up to and including 4" systems) or part number 6501200042 (for 25" x 28.3" cabinet; 6" and 8" systems) is required to make the Reliable PrePaK OSHPD compliant. One kit is required for each PrePaK (reference Caution Sheet 331).

2. Reliable PrePaK™ Part Number Configurator (Units Equipped with Nitrogen Generator)

Table C

PrePaK	Size[1]	System Type	Solenoid[2][3]	Release Control Panel[5]	Air Compressor[6]	Air Devices[8][9]	Future
655	U	V	W	X	Y	Z	0
	2 = 2"	1 = Type D Single/ Double Interlock Preaction	0 = Not required	0 = No control panel	0 = None[7]	8 = FPS 900 nitrogen generator	
	0 = 2-1/2"	2 = Type F Double Interlock Preaction	1 = 175 psi rated	1 = Potter PFC-4410G3	1 = 1/2 hp 115vac 60hz QRM2-50115T	9 = FPS 900 nitrogen generator & B-1 accelerator	
	3 = 3"	3 = DDX LP (Low Pressure) Dry	2 = 300 psi rated	2 = Potter PFC-4410G3 with RLY-5 module	2 = 1 hp 115vac 60hz QRM2-100115T	**Note:** Pressure maintenance device is provided for all system types.	
	4 = 4"	4 = DDX-LP to Type F Preaction Convertible	5 = 175 psi rated with coil supervisory switch[4]	3 = Potter PFC-4410G3 with IDC-6 module	3 = 1/2 hp 220vac 60hz QRM2-50220T		
	6 = 6"		6 = 300 psi rated with coil supervisory switch[4]	4 = Potter PFC-4410G3 with CA-4064 module	4 = 1 hp 220vac 60hz QRM2-100220T		
	A = 2" with system side control valve			5 = Potter PFC-4410G3 with IDC-6 & CA-4064 modules			
	B = 2-1/2" with system side control valve			6 = Potter PFC-4410G3 with CA-4064 & RLY-5 modules			
	C = 3" with system side control valve			7 = Potter PFC-4410G3 with IDC-6 & RLY-5 modules			
	D = 4" with system side control valve			**Note:** Module options 2 through 7 above will require additional field wiring within the release control panel. These module terminals are NOT mapped to the auxiliary terminal junction box.			
	E = 6" with system side control valve						

Notes:

1. Manifold size may differ from system size. Customer to confirm size of supply pipe to PrePaK™ and provide appropriate transition fittings/couplings if necessary (see pages 2 and 3 of this document).
2. "W" must be "0" when "V" is 3. (Solenoid valve is only used with system types 1, 2, and 4.)
3. Reference technical bulletin 718 for solenoid model numbers and details.
4. cULus listed Potter Electric Signal Company CoilKeeper™. (In accordance with NFPA 13 2019 edition, effective January 1, 2021, all systems incorporating an electric solenoid shall be capable of providing an audible and visual indication of system impairment should the actuator be removed from the deluge or preaction system trim.)
5. If "0 = None" option is selected, customer to provide separate UL and/or FM release control panel for systems utilizing electric solenoid release. Panel must be compatible with the Parker Hannifin solenoid valve provided with the unit and include a method to temporarily disable the releasing circuit for testing.
6. Air compressor selection depends on system size and normal system pressure; customer to specify.
7. If "0 = None" option is selected, customer to provide separate compressed air source.
8. Air device "Z" option 9 (B-1 accelerator) is not available when system type "V" is 1. Accelerator is only used with system types 2, 3, and 4.
9. One N2-Blast AutoPurge® and one Quick-Check® Portable Nitrogen Purity Sensor device is included with each PrePaK™ that incorporates a nitrogen generator.

Optional Seismic Kit (order separately): Seismic upgrade kit, Reliable part number 6501200042 is required to make the Reliable N2Blast PrePaK OSHPD compliant. One kit is required for each PrePaK (reference Caution Sheet 331).

3. Reliable PrePaK™ Part Number Configurator (Units Equipped with VPS System)

Table D

PrePaK	Size[1]	System Type	Solenoid[2][3]	Release Control Panel[5]	Air Compressor[6]	Air Devices[8][9]	Future
VPS	U	V	W	X	Y	Z	0
	2 = 2”	1 = Type D Single/ Double Interlock Preaction	0 = None	0 = None	0 = None	1 = VPS 500	
	0 = 2-½”	2 = Type F Double Interlock Preaction	1 = 175 psi rated	1 = Potter PFC4410G3	1 = ½ HP 115 VAC	2 = VPS 500 with accelerator	
	3 = 3”	3 = DDX LP (Low Pressure) Dry	2 = 300 psi rated	2 = Potter PFC4410G3 with RLY-5 module	2 = 1 HP 115 VAC	3 = VPS 1000	
	4 = 4”	7 = Single Interlock Dry Pilot Line	5 = 175 psi rated with coilkeeper supervisory switch	3 = Potter PFC-4410G3 with IDC-6 module	3 = ½ HP 220 VAC	4 = VPS 1000 with accelerator	
	6 = 6”	8 = Single Interlock Wet Pilot Line	6 = 300 psi rated with coilkeeper supervisory switch	4 = Potter PFC-4410G3 with CA-4064 module	4 = 1 HP 220 VAC	5 = VPS 1500	
	8 = 8”	9 = Type PL Double Interlock Preaction		5 = Potter PFC-4410G3 with IDC-6 & CA-4064 modules	5 = ½ HP 220 VAC 50HZ	6 = VPS 1500 with accelerator	
	A= 2” with system side control valve	C = Non-Interlock Preaction		6 = Potter PFC-4410G3 with CA-4064 & RLY-5 modules	6 = 1 HP 220 VAC 50HZ	7 = VPS 2000	
	B = 2-½” with system side control valve	D = DDX-LP to Type F Preaction Convertible		7 = Potter PFC-4410G3 with IDC-6 & RLY-5 modules		8 = VPS 2000 with accelerator	
	C = 3” with system side control valve			**Note:** Module options 2 through 7 above will require additional field wiring within the release control panel. These module terminals are NOT mapped to the auxiliary terminal junction box.		**Note:** Pressure maintenance device is provided for all system types.	
	D = 4” with system side control valve						
	E = 6” with system side control valve						
	F = 8” with system side control valve						

Notes:

1. Manifold size may differ from system size. Customer to confirm size of supply pipe to PrePaK™ and provide appropriate transition fittings/couplings if necessary (see pages 2 and 3 of this document).
2. “W” must be “0” when “V” is 3, 7, 8, or 9. (Solenoid valve is only used with system types 1, 2, C, and D.)
3. Reference technical bulletin 718 for solenoid model numbers and details.
4. cULus listed Potter Electric Signal Company CoilKeeper™. (In accordance with NFPA 13 2019 edition, effective January 1, 2021, all systems incorporating an electric solenoid shall be capable of providing an audible and visual indication of system impairment should the actuator be removed from the deluge or preaction system trim.)
5. If “0 = None” option is selected, customer to provide separate UL and/or FM release control panel for systems utilizing electric solenoid release. Panel must be compatible with the Parker Hannifin solenoid valve provided with the unit and include a method to temporarily disable the releasing circuit for testing.
6. Air compressor selection depends on system size and normal system pressure; customer to specify.
7. If “0 = None” option is selected, customer to provide separate compressed air source.
8. Air device “Z” options 2, 4, 6, and 8 (accelerator) are not available when system type “V” is 1, 7, or 8. Accelerator is only used with system types 2, 3, 9, C, and D.
9. 2” through 4” systems are only available with 500 gallon VPS unit.

Optional Seismic Kit (order separately): Seismic upgrade kit, Reliable part number 6501200042 is required to make the Reliable N2Blast PrePaK OSHPD compliant. One kit is required for each PrePaK (reference Caution Sheet 331).