Model DDX Type PL Double Interlock Preaction System

Pneumatic/Pneumatic Release

Features

- Straight through design, low friction loss
- Mechanical valve with latching clapper
- Intermediate chamber built into seat
- Pneumatic/pneumatic release

Product Description

The Reliable Model DDX is a hydraulic piston (pushrod) operated mechanical type deluge valve. When trimmed for use as a double interlock pneumatic/pneumatic release preaction system, the valve will operate upon activation of the Model PL actuator due to loss of pneumatic pressure in the dry pilot detection line *and* loss of system pneumatic pressure. Following operation, the valve is able to be reset externally.

When the side chamber of the Reliable Model DDX Deluge Valve is pressurized, hydraulic supply pressure acts on the pushrod assembly and simultaneously on the underside of the clapper. The resultant force of the supply pressure acting on the pushrod is multiplied by the mechanical advantage of the lever and holds clapper closed against normal supply pressure surges.

When a releasing device is opened, the pushrod chamber pressure falls instantaneously. When the hydraulic pressure in the pushrod chamber approaches approximately one-third of the supply pressure, the upward force of the supply pressure acting beneath the clapper overcomes the lever-applied force thereby opening the clapper. Once the clapper has opened, the lever acts as a latch, preventing the clapper from returning to the closed position. Water from the supply flows through the Model DDX Deluge Valve into the system piping. Water also flows through the alarm outlet to any attached alarm devices. After system shutdown, the Model DDX Deluge Valve may be reset externally using the reset knob at the rear of the valve. The external reset feature of the Model DDX Deluge Valve provides a means for placing the fire protection system into service without having to remove the face plate of the valve.

Important! Reliable valves must be handled, stored, and installed in accordance with the guidelines in Caution Sheet 336 and this bulletin. Failure to follow these instructions may result in unintended operation or nonoperation of the fire protection system.

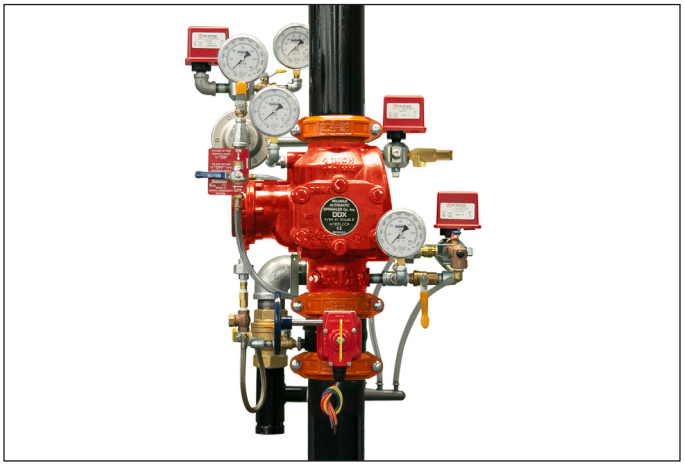

Model DDX Type PL Double Interlock Preaction System
(Image is subject to change)

Additional information regarding the setup, inspection, testing, and maintenance of Model DDX valves and systems can be found in Technical Bulletin 520.

Model DDX Valve Listings and Approvals — **Table A**

Valve Size	End Connection[1]	Pressure Rating [2][3]	Listings & Approvals
2” (50mm), 2-1/2” (65mm), 76mm, & 3” (80mm)	Groove/Groove	250 psi (17,2 bar)	cULus, FM
4” (100mm)	Groove/Groove	300 psi (20,7 bar)	cULus, FM
	Flange/Groove		
	Flange/Flange		
6” (150mm)	Groove/Groove		
	Flange/Groove		
	Flange/Flange		
165mm	Groove/Groove	300 psi (20,7 bar)	cULus, FM
8” (200mm)	Groove/Groove	250 psi (17,2 bar)	cULus, FM
	Flange/Flange		

Notes:
1. Grooved ends per ANSI/AWWA C606; flanged ends per ASME B16.5 Class 150 or ISO 7005-2 PN16 (specify).
2. For electric release, when fitted with 300 psi (20.7 bar) solenoid valve.
3. Valves are intended to be installed on systems where the pressure does not exceed the working capabilities of the end configurations.

Model DDX Type PL Double Interlock Preaction System

The Type PL trim incorporates a dual chamber low pressure Model PL pneumatic actuator. Hydraulic pressure is maintained in the pushrod chamber when both chambers are properly pressurized. The air or nitrogen pressure required to maintain the actuator in the closed position is specified in Table F on page 4. Note: A separate pneumatic supply (or maintenance device) is required for each chamber of the Model PL actuator to prevent accidental release of the system. Pneumatic pressure in the dry pilot line detection system is monitored by a pressure switch which provides an electric signal upon loss of pressure in the pilot line and associated Model PL actuator chamber. At this point, the Type PL system is essentially operating as a dry pipe system. Upon subsequent loss of pneumatic pressure in the system and associated Model PL actuator chamber, the pneumatic actuator opens and relieves hydraulic pressure in the pushrod chamber. The release of hydraulic pressure from the pushrod chamber causes the Model DDX Deluge Valve to open and flow water into the system. Alarm devices are activated upon the flow of water into the sprinkler system piping. The pneumatic system pressure holding the Model PL actuator closed also serves to monitor the integrity of the piping. Loss of pneumatic pressure in the system results in a low pressure supervisory signal, however, in the absence of a detection event the Model DDX valve will not open. This results in the main purpose of preaction systems: avoiding the accidental release of water into the protected space due to damaged pipe or sprinklers. The Model PL is uniquely suited for areas where the use of electrical detection is not desired or appropriate.

Model DDX Type PL Double Interlock Preaction System — **Figure 1**

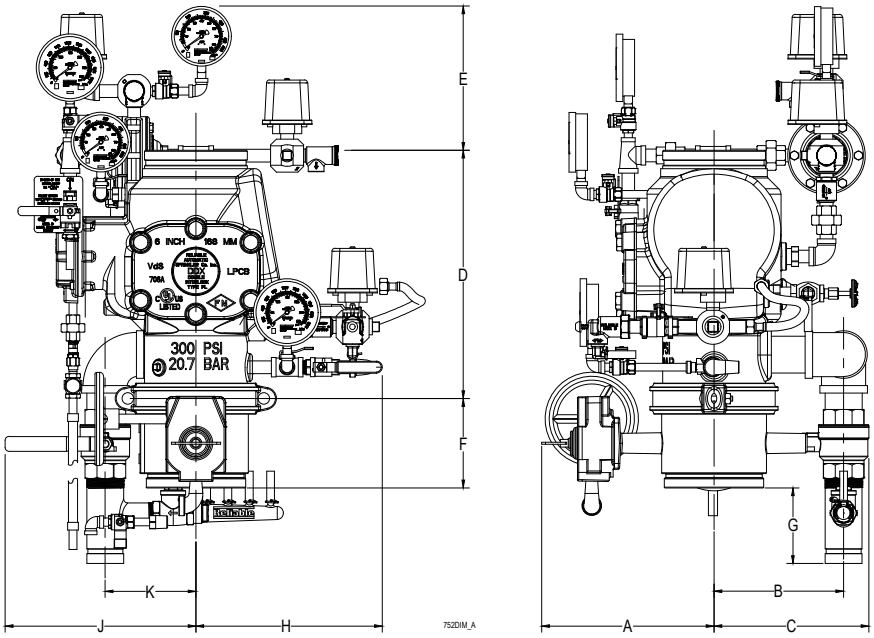

Table B

Nominal Pipe Size	Installation Dimensions in Inches (mm)										
	A	B	C	D(1)	D(2)	E	F(3)	G	H	J	K
2” (50mm)	8-1/2 (216)	7-3/4 (197)	9-1/8 (232)	12-1/2 (318)	NA	10-1/4 (260)	3-7/8 (98)	1-1/2 (38)	10 (254)	9-1/2 (241)	4 (102)
2-1/2” (65 mm), 3” (80 mm) & 76 mm	8-1/2 (216)	7-3/4 (197)	9-1/8 (232)	12-1/2 (318)	NA	10-1/4 (260)	3-7/8 (98)	1-3/8 (35)	9-7/8 (251)	9-1/2 (241)	3-7/8 (99)
4” (100 mm)	9-3/4 (248)	7-5/8 (194)	9-1/4 (235)	14 (356)	16 (406)	9 (229)	4-9/16 (116)	5-1/4 (133)	11 (279)	11-7/8 (301)	5-1/2 (140)
6” (150 mm) & 165 mm	11-1/8 (283)	8-1/8 (206)	9-3/4 (248)	16 (406)	19 (483)	8-3/4 (222)	5-7/8 (149)	3-3/4 (95)	11 (279)	12 (305)	5-1/2 (140)
8” (200 mm)	12-5/8 (321)	9 (229)	10-5/8 (270)	19-3/8 (492)	21-1/4 (540)	11-1/2 (292)	5-1/4 (134)	4-1/8 (105)	12-5/8 (306)	12 (305)	5-1/2 (140)

Notes:
1. End to end take out of Model DDX valve with grooved inlet.
2. End to end take out of Model DDX valve with flanged inlet where available (see page 1).
3. Not applicable to 76mm or 165mm systems, or systems using a flanged inlet Model DDX valve.

Technical Data

Materials

Please refer to Assembly Drawings.

Valve Details — **Table C**

Valve Size	End Connection	End to End	Weight (Approx.)	Color
2" (50mm), 2½" (65mm), 76mm & 3" (80mm)	Groove/ Groove	12½" (318mm)	34 lbs (15 kg)	Red
4" (100mm)	Groove/ Groove	14" (356mm)	64 lbs (29 kg	
	Flange/ Groove	16" (406mm)	79 lbs (36 kg)	
	Flange/ Flange	16" (406mm)	92 lbs (42 kg)	
6" (150mm)	Groove/ Groove	16" (406mm)	95 lbs (43 kg)	
	Flange/ Groove	19" (483mm)	122 lbs (56 kg)	
	Flange/ Flange	19" (483mm)	138 lbs (69 kg)	
165mm	Groove/Groove	16" (406mm)	95lbs (43kg)	
8" (200mm)	Groove/ Groove	$19^{3}/_{8}$" (492mm)	148 lbs (67 kg)	
	Flange/ Flange	21¼" (540mm)	197 lbs (90 kg)	

Trim Shipping Weight (Approx.) — **Table D**

Trim Configuration	2" (50 mm), 2½" (65 mm), 3" (80 mm), & 76 mm	4" (100 mm), 6" (150 mm), 8" (200 mm), & 165 mm
Type PL (Pneumatic/Pneumatic)	50 lbs (23 kg)	55 lbs (25 kg)

Friction Loss — **Table E**

Valve Size	Equivalent Length*		Cv (gpm to create 1 psi pressure loss)
	C = 120	C = 100	
2" (50mm)	4.4 ft (1,3 m)	3.1 ft (1,0 m)	101
2½" (65mm)	6.0 ft (1,8 m)	4.3 ft (1,3 m)	236
76mm	7.7 ft (2,3 m)	5.5 ft (1,7 m)	241
3" (80mm)	12.6 ft (3,8 m)	9.0 ft (2,7 m)	254
4" (100mm)	14 ft (4,3 m)	10 ft (3,0 m)	469
165mm	29.4 ft (9,0 m)	20.9 ft (6,4 m)	886
6" (150mm)	29.4 ft (9,0 m)	20.9 ft (6,4 m)	886
8" (200mm)	53.5 ft (16,3 m)	38.1 ft (11,6 m)	1516

***Note:** Expressed in equivalent length of Schedule 40 pipe, based on Hazen & Williams formula.

Model DDX Hydraulic Friction Loss Graph **Figure 2**

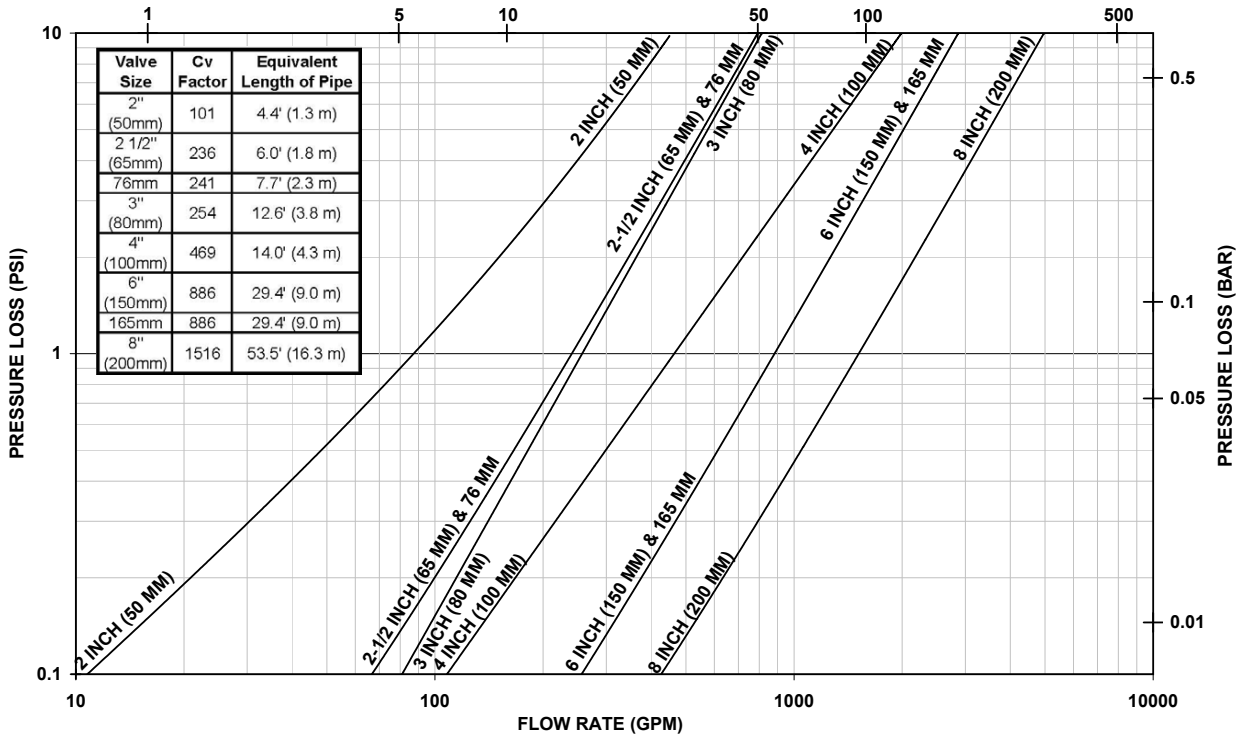

System Pneumatic Pressure **Table F**

Maximum Water Pressure psi (bar)	Minimum Air/Nitrogen Pressure psi (bar)
20 (1.4)	8 (0.6)[2]
30 (2.1)	10 (0.7)[2]
50 (3.4)	12 (0.8)[2]
75 (5.2)	13 (0.9)
100 (6.9)	15 (1.0)
125 (8.6)	16 (1.1)
150 (10.3)	17 (1.2)
175 (12.1)	18 (1.2)
200 (13.8)	19 (1.3)
225 (15.5)	21 (1.4)
250 (17.2)	22 (1.5)
275 (19.0)	23 (1.6)
300 (20.7)	24 (1.7)

Notes:

1. A separate pneumatic supply (or maintenance device) is required for each chamber of the Model PL actuator to prevent accidental release of the system.
2. Pneumatic pressure less than the minimum specified will result in inadvertent operation of the system.
3. Pneumatic pressure higher than the minimum specified may result in delayed operation of the system.

Caution! Where the maximum water pressure is 20 psi (1.4 bar), 30 psi (2.1 bar) or 50 psi (3.4 bar) the maximum pneumatic pressure cannot exceed the 10 psi (.7 bar) 14 psi (1 bar) and 16 psi (1.1 bar) respectively. This may prohibit the use of a tank-less air compressor (see note 4).

4. The use of a listed pressure maintenance device such as the Reliable Model A or Model DD in conjunction with a tank-mounted air compressor or nitrogen generator incorporating a tank is highly recommended, even for single systems. (This is an NFPA 13 requirement for multiple systems fed from a common source.)

Notes (cont.) (Table F):

5. Where a tank-less compressor is used, the "start/on" setting of the pressure switch shall not be less than the minimum pneumatic pressure in the table. The "stop/off" pressure will be determined by the required differential of the compressor pressure switch.
6. During set-up, higher pneumatic pressure may temporarily be required to set the Model LP Actuator. Following set-up, lower the pneumatic pressure of the system to be in accordance with the table.
7. In no case should the pneumatic pressure exceed 30 psi (2.1 bar) to prevent damage to the actuator diaphragm.

LP Dry Pilot Actuator Characteristics **Table G**

Maximum Water Pressure psi (bar)	Nominal Trip Point psi (bar)
20 (1.4)	5 (0.36)
30 (2.1)	5 (0.36)
50 (3.4)	7 (0.51)
75 (5.2)	9 (0.63)
100 (6.9)	10 (0.72)
125 (8.6)	11 (0.78)
150 (10.3)	12 (0.83)
175 (12.1)	13 (0.9)
200 (13.8)	13 (0.9)
225 (15.5)	14 (1)
250 (17.2)	14 (1)
275 (19.0)	14 (1)
300 (20.7)	14 (1)

Note:

1. The Dry Pilot Actuator differential should be used as the "Dry Valve Differential" for valves using the Reliable Model LP Dry Pilot Actuator. Actual trip points may vary ± 2 psi due to the design of the actuator.

Type PL Double Interlock System Components

Figure 3

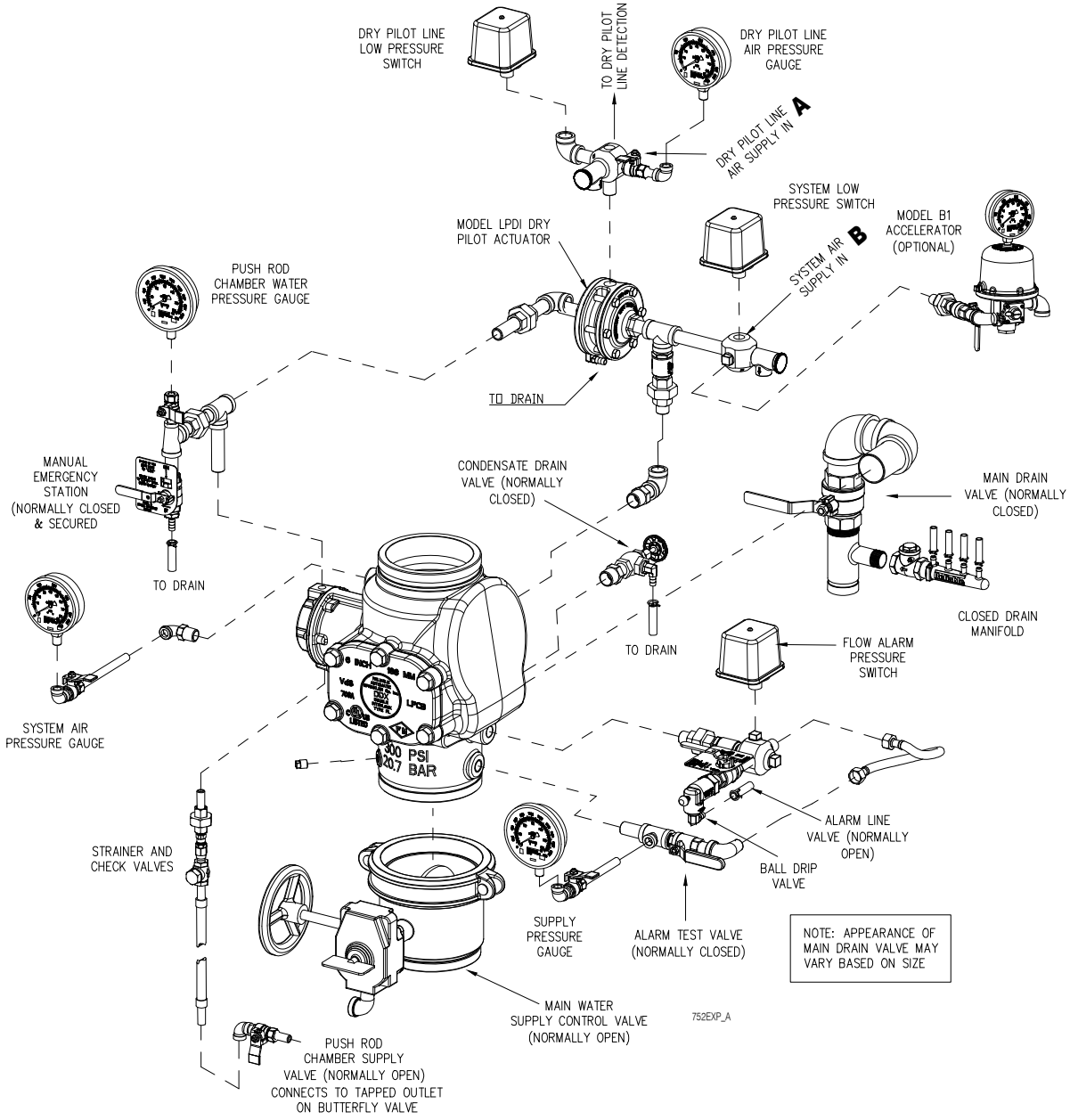

Installation

1. The Model DDX valve shall be installed, maintained, and tested in accordance with NFPA13, "Standard for the Installation of Sprinkler Systems," as well as the requirements of any authorities having jurisdiction. Failure to follow installation instructions may void the warranty and/or listing of the system.
2. The Model DDX valve must only be installed in the vertical position with water moving up and through the valve.
3. Verify compatibility of the Model DDX materials with the water supply and the environment where the valve will be installed prior to installation.
4. The Model DDX valve must be installed in a location where the temperature is maintained at a minimum of 40°F (4°C). Heat tracing of the valve and/or trim is not permitted.
5. The Model DDX valve must not be installed in a location where the ambient and/or the water temperature exceeds 140°F (60°C).
6. Unauthorized revisions to the trim arrangement of the valve may void the warranty and/or listing of the system.
7. Design and installation of detection and release systems, when required, must be performed in accordance with applicable NFPA standards and the authority having jurisdiction.
8. Drains should be piped to a location that will avoid damage to property and/or injury to personnel.
9. Whenever ambient temperature conditions are high, the water temperature in the Model DDX-LP Deluge Valve System pushrod chamber may rise, thereby increasing the pressure in the chamber to values exceeding the rated pressure of the system. Where normal temperature and pressure is exceeded, a pressure relief kit (P/N 6503050001; ordered separately) can be installed to limit pushrod chamber hydraulic pressure.
10. Please refer to Technical Bulletin 520 for additional information on the setup, inspection, testing, and maintenance of Model DDX systems.
11. The Reliable Model B1 Accelerator may be added to the Model DDX trim to improve the reaction speed of the deluge valve upon loss of system pneumatic pressure. Please see Technical Bulletin 323 for additional information.

Listings and Approvals

(Only when used with Reliable Trim Sets)

1. Listed by Underwriters Laboratories, Inc. and UL certified for Canada.
2. Certified by FM Approvals (FM).

Guarantee

For Reliable Automatic Sprinkler Co., Inc. guarantee, terms, and conditions, visit www.reliablesprinkler.com.

Ordering Information

Specify:

Valve Model: DDX Type PL Double Interlock Preaction

Valve Size: [2" (50mm)] [2-1/2" (65mm)] [76mm] [3" (80mm)] [4" (100mm)] [6" (150mm)] [165mm] [8" (200mm)]

End Connection Configuration (see Table A): [Groove/Groove] [Flange/Groove] [Flange/Flange]

Note: 2", 2-1/2", 3", and 76mm valves are available only with grooved ends.

Solenoid: [175 psi (12,1 bar)] [300 psi (20,7)]

Trim Configuration: [Loose Trim] [Segmentally Assembled Trim] [Fully Assembled Trim w/o Water Supply Control Valve] [Fully Assembled w/ Water Supply Control Valve]

Water Pressure Gauges: 0-300 psi (20,7 bar) or 0-600 psi (41,4 bar)

Optional Equipment

Pushrod Chamber Pressure Relief Kit: P/N 6503050001

Model B1 Accelerator Kit: P/N 6501200019

Streamline™ Flexible Drain Hose: Please see Technical Bulletin 442

Service Kits

Service kits are available for routine servicing of the valve (reference Assembly Drawings on website). Service kits for the Model DDX Deluge Valve include the following components:

- Clapper Seal Assembly (item 8)
- Cover Gasket (item 9)
- Bumpstop(s) (item 10)
- Push rod chamber diaphragm (item 18)
- Grease (item 42)

2", 2-1/2", and 3" Model DDX Service Kit: PN 6501200R03
4" Model DDX Service Kit: PN 6501200R04
6" Model DDX Service Kit: PN 6501200R05
8" Model DDX Service Kit: PN 6501200R06

5 P/N 9999970442