Reliable®

Model DDX Single Interlock Preaction System

Wet Pilot Line, Dry Pilot Line, and Electric Release Trims

Features

- Straight through design, low friction loss
- Mechanical valve with latching clapper
- Intermediate chamber built into seat
- Three releasing trim options

Product Description

The Reliable Model DDX is a hydraulic piston (pushrod) operated mechanical type deluge valve. When trimmed for use as a single interlock preaction system, the valve will operate upon the activation of the wet-pilot line, dry-pilot line, or electrical detection system. Following operation, the valve is able to be reset externally.

When the side chamber of the Reliable Model DDX Deluge Valve is pressurized, hydraulic supply pressure acts on the pushrod assembly and simultaneously on the underside of the clapper. The resultant force of the supply pressure acting on the pushrod is multiplied by the mechanical advantage of the lever and holds clapper closed against normal supply pressure surges.

When a releasing device is opened, the pushrod chamber pressure falls instantaneously. When the hydraulic pressure in the pushrod chamber approaches approximately one-third of the supply pressure, the upward force of the supply pressure acting beneath the clapper overcomes the lever-applied force thereby opening the clapper. Once the clapper has opened, the lever acts as a latch, preventing the clapper from returning to the closed position. Water from the supply flows through the Model DDX Deluge Valve into the system piping. Water also flows through the alarm outlet to any attached alarm devices. After system shutdown, the Model DDX Deluge Valve may be reset externally using the reset knob at the rear of the valve. The external reset feature of the Model DDX Deluge Valve provides a means for placing the fire protection system into service without having to remove the face plate of the valve.

Important! Reliable valves must be handled, stored, and installed in accordance with the guidelines in Caution Sheet 336 and this bulletin. Failure to follow these instructions may result in unintended operation or nonoperation of the fire protection system.



Model DDX Single Interlock Preaction System
(Image is subject to change)

Additional information regarding the setup, inspection, testing, and maintenance of Model DDX valves and systems can be found in Technical Bulletin 520.

Model DDX Valve Listings and Approvals — **Table A**

Valve Size	End Connection[1]	Pressure Rating [2][3]	Listings & Approvals
2” (50mm), 2-1/2” (65mm), 76mm, & 3” (80mm)	Groove/Groove	250 psi (17,2 bar)	cULus, FM, VdS
4” (100mm)	Groove/Groove	300 psi (20,7 bar)	cULus, FM, VdS, LPCB
	Flange/Groove		
	Flange/Flange		
6” (150mm)	Groove/Groove		
	Flange/Groove		
	Flange/Flange		
165mm	Groove/Groove	300 psi (20,7 bar)	cULus, FM, VdS
8” (200mm)	Groove/Groove	250 psi (17,2 bar)	cULus, FM, VdS, LPCB
	Flange/Flange		

Notes:
1. Grooved ends per ANSI/AWWA C606; flanged ends per ASME B16.5 Class 150 or ISO 7005-2 PN16 (specify).
2. For electric release, when fitted with 300 psi (20.7 bar) solenoid valve.
3. Valves are intended to be installed on systems where the pressure does not exceed the working capabilities of the end configurations.

Model DDX Single Interlock System, Wet Pilot Line Release Trim

Wet-pilot lines are a hydraulic detection/release system that can be used in conditioned (i.e. freeze protected) areas. The wet-pilot line is an extension of the hydraulically pressurized pushrod chamber on the Model DDX Deluge Valve. Closed sprinklers or fixed-temperature-release pilot line detectors (PLD) are installed throughout the protected area on small diameter piping that contains water under pressure. Upon activation of a pilot line sprinkler or pilot line detector, hydraulic pressure is released from the pilot line and the pushrod chamber. The release of hydraulic pressure from the pushrod chamber causes the Model DDX Deluge Valve to open and effectively convert the single interlock system into a wet pipe system. Alarm devices are activated upon the flow of water into the sprinkler system piping. It is important to note that the length and height of wet-pilot lines is limited by the available system water pressure (refer to Figure 4 on page 6). Preaction systems having more than twenty (20) sprinklers are required to be pneumatically supervised to monitor the integrity of the system piping. The Model DDX Single Interlock Preaction System is designed to utilize 15 psi (1.03 bar) of air or nitrogen pressure which is constantly monitored by a pressure switch. Loss of pneumatic pressure in the system in the absence of a detection event results in a low pressure supervisory signal, however, the Model DDX valve will not open. This results in the main purpose of preaction systems: avoiding the accidental release of water into the protected space due to damaged pipe or sprinklers.

Model DDX Single Interlock Preaction System, Wet Pilot Line Release Trim — **Figure 1**

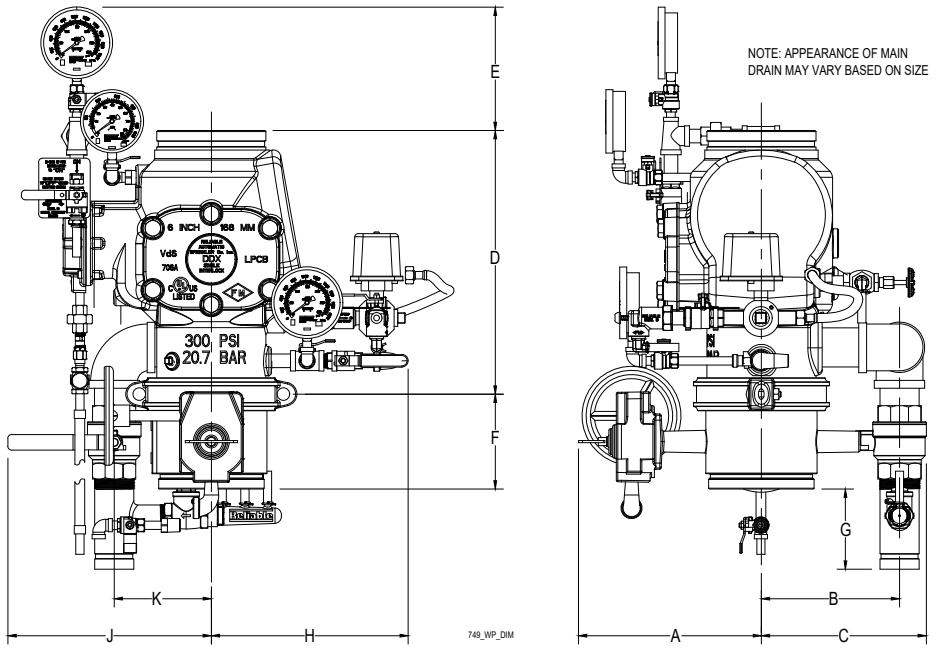

Model DDX Single Interlock Preaction System, Wet Pilot Line Release Trim — **Table B**

Nominal Pipe Size	Installation Dimensions in Inches (mm)										
	A	B	C	D(1)	D(2)	E	F(3)	G	H	J	K
2" (50mm)	8-1/2 (216)	7-3/4 (197)	9-1/8 (232)	12-1/2 (318)	NA	8-3/8 (213)	3-7/8 (98)	1-1/2 (38)	10 (254)	9-1/2 (241)	4 (102)
2-1/2" (65 mm), 3" (80 mm) & 76 mm	8-1/2 (216)	7-3/4 (197)	9-1/8 (232)	12-1/2 (318)	NA	8-3/8 (213)	3-7/8 (98)	1-3/8 (35)	9-7/8 (251)	9-1/2 (241)	3-7/8 (99)
4" (100 mm)	9-3/4 (248)	7-5/8 (194)	9-1/4 (235)	14 (356)	16 (406)	7-1/4 (184)	4-9/16 (116)	5-1/4 (133)	11 (279)	11-7/8 (301)	5-1/2 (140)
6" (150 mm) & 165 mm	11-1/8 (283)	8-1/8 (206)	9-3/4 (248)	16 (406)	19 (483)	6-7/8 (175)	5-7/8 (149)	3-3/4 (95)	11 (279)	12 (305)	5-1/2 (140)
8" (200 mm)	12-5/8 (321)	9 (229)	10-5/8 (270)	19-3/8 (492)	21-1/4 (540)	3-3/4 (95)	5-1/4 (134)	4-1/8 (105)	12-5/8 (306)	12 (305)	5-1/2 (140)

Notes:
1. End to end take out of Model DDX valve with grooved inlet.
2. End to end take out of Model DDX valve with flanged inlet where available (see page 1).
3. Not applicable to 76mm or 165mm systems, or systems using a flanged inlet Model DDX valve.

Dry pilot lines are a pneumatic detection/release system that can be used in unconditioned areas or areas where the height/distance limits of a wet pilot line are exceeded. The dry pilot line is connected to the Model A Dry Pilot actuator which isolates pneumatic pressure from the water pressure in the hydraulically pressurized pushrod chamber on the Model DDX Deluge Valve. Closed sprinklers or fixed-temperature-release pilot line detectors (PLD) are installed throughout the protected area on small diameter piping that contains pressurized air or nitrogen. The pneumatic pressure required to maintain the Model LP Dry-Pilot Actuator in the closed position is specified in Table H on page 6. Upon activation of a pilot line sprinkler or pilot line detector, pneumatic pressure is released from the pilot line causing the Model LP Pneumatic Actuator to open and release hydraulic pressure from the pushrod chamber. The release of hydraulic pressure from the pushrod chamber causes the Model DDX Deluge Valve to open and effectively convert the single interlock system to a wet pipe system. Alarm devices are activated upon the flow of water into the sprinkler system piping. Preaction systems having more than twenty (20) sprinklers are required to be pneumatically supervised to monitor the integrity of the system piping. The pneumatic pressure of the Model DDX Single Interlock Preaction System is constantly monitored by a pressure switch for off normal (low or high) conditions. Loss of pneumatic pressure in the system results in a low pressure supervisory signal, however, in the absence of a detection event the Model DDX valve will not open. This results in the main purpose of preaction systems: avoiding the accidental release of water into the protected space due to damaged pipe or sprinklers.

Model DDX Single Interlock System, Dry Pilot Line Release Trim **Figure 2**

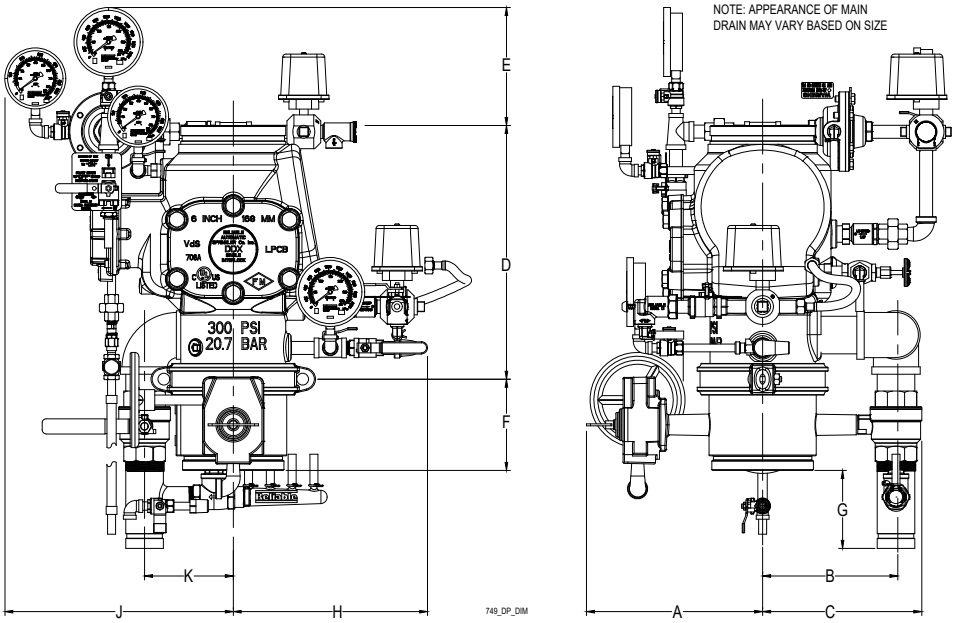

Model DDX Single Interlock System, Dry Pilot Line Release Trim **Table C**

Nominal Pipe Size Inches (mm)	Installation Dimensions in Inches (mm)										
	A	B	C	D(1)	D(2)	E	F	G	H	J	K
2" (50)	8-1/2 (216)	7-3/4 (197)	9-1/8 (232)	12-1/2 (318)	NA	8-3/8 (213)	3-7/8 (98)	1-1/2 (38)	10 (254)	12-1/2 (318)	4 (102)
2-1/2" (65), 3" (80), & 76mm	8-1/2 (216)	7-3/4 (197)	9-1/8 (232)	12-1/2 (318)	NA	8-3/8 (213)	3-7/8 (98)	1-3/8 (35)	9-7/8 (251)	12-1/2 (318)	3-7/8 (99)
4" (100)	9-3/4 (248)	7-5/8 (194)	9-1/4 (235)	14 (356)	16 (406)	7-1/4 (184)	4-9/16 (116)	5-1/4 (133)	11 (279)	13-7/8 (352)	5-1/2 (140)
6" (150) & 165mm	11-1/8 (283)	8-1/8 (206)	9-3/4 (248)	16 (406)	19 (483)	6-7/8 (175)	5-7/8 (149)	3-3/4 (95)	11 (279)	14-1/4 (362)	5-1/2 (140)
8" (200)	12-5/8 (321)	9 (229)	10-5/8 (270)	19-3/8 (492)	21-1/4 (540)	3-3/4 (95)	5-1/4 (134)	4-1/8 (105)	12-5/8 (306)	15-1/4 (387)	5-1/2 (140)

Notes:
1. End to end take out of Model DDX valve with grooved inlet.
2. End to end take out of Model DDX valve with flanged inlet where available (see page 1).
3. Not applicable to 76mm or 165mm systems, or systems using a flanged inlet Model DDX valve.

Where system actuation by means of an approved detection and release system is desired, the electric release trim is used. The normally closed solenoid valve in the release trim maintains hydraulic pressure in the pushrod chamber. Upon receipt of a signal from the electric detection system, the release control panel energizes the solenoid valve causing it to open. The release of hydraulic pressure from the pushrod chamber causes the Model DDX Deluge Valve to open and effectively convert the single interlock system into a wet pipe system. Alarm devices are activated upon the flow of water into the sprinkler system piping. Preaction systems having more than twenty (20) sprinklers are required to be pneumatically supervised to monitor the integrity of the system piping. The Model DDX Single Interlock Preaction System is designed to utilize 15 psi (1.03 bar) of air or nitrogen pressure which is constantly monitored by a pressure switch. Loss of pneumatic pressure in the system in the absence of a detection event results in a low pressure supervisory signal, however, the Model DDX valve will not open. This results in the main purpose of preaction systems: avoiding the accidental release of water into the protected space due to damaged pipe or sprinklers.

Model DDX Single Interlock System, Electric Release Trim **Figure 3**

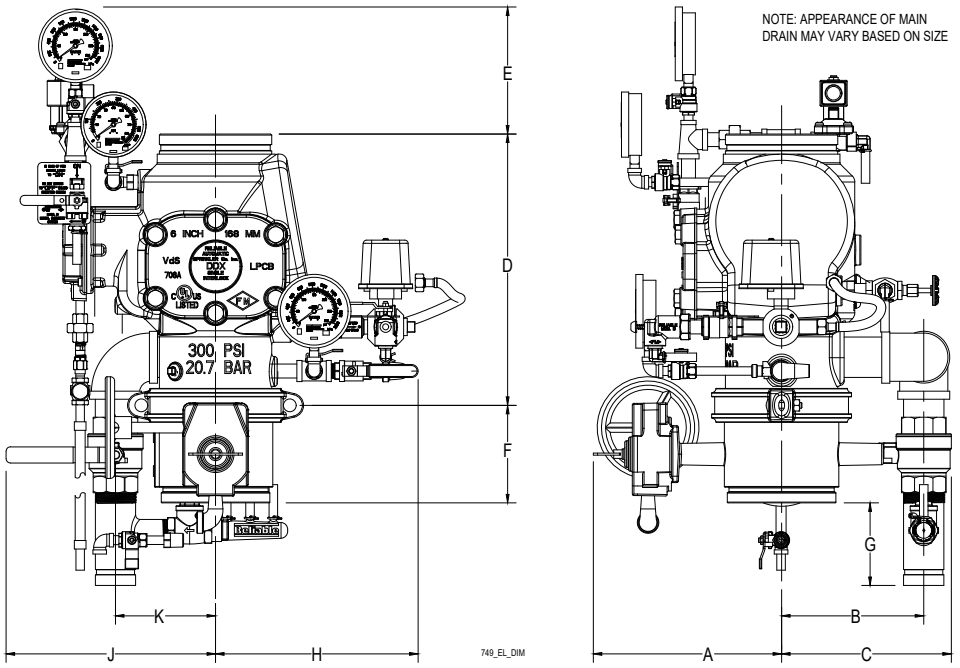

Model DDX Single Interlock System, Electric Release Trim **Table D**

Nominal Pipe Size Inches (mm)	Installation Dimensions in Inches (mm)										
	A	B	C	D(1)	D(2)	E	F(3)	G	H	J	K
2" (50)	8-1/2 (216)	7-3/4 (197)	9-1/8 (232)	12-1/2 (318)	NA	8-3/8 (213)	3-7/8 (98)	1-1/2 (38)	10 (254)	9-1/2 (241)	4 (102)
2-1/2" (65), 3" (80), & 76mm	8-1/2 (216)	7-3/4 (197)	9-1/8 (232)	12-1/2 (318)	NA	8-3/8 (213)	3-7/8 (98)	1-3/8 (35)	9-7/8 (251)	9-1/2 (241)	3-7/8 (99)
4" (100)	9-3/4 (248)	7-5/8 (194)	9-1/4 (235)	14 (356)	16 (406)	7-1/4 (184)	4-9/16 (116)	5-1/4 (133)	11 (279)	11-7/8 (301)	5-1/2 (140)
6" (150) & 165mm	11-1/8 (283)	8-1/8 (206)	9-3/4 (248)	16 (406)	19 (483)	6-7/8 (175)	5-7/8 (149)	3-3/4 (95)	11 (279)	12 (305)	5-1/2 (140)
8" (200)	12-5/8 (321)	9 (229)	10-5/8 (270)	19-3/8 (492)	21-1/4 (540)	3-3/4 (95)	5-1/4 (134)	4-1/8 (105)	12-5/8 (306)	12 (305)	5-1/2 (140)

Notes:
1. End to end take out of Model DDX valve with grooved inlet.
2. End to end take out of Model DDX valve with flanged inlet where available (see page 1).
3. Not applicable to 76mm or 165mm systems, or systems using a flanged inlet Model DDX valve.

Technical Data

Materials

Please refer to Assembly Drawings.

Valve Details — **Table E**

Valve Size	End Connection	End to End	Weight (Approx.)	Color
2" (50mm), 2½" (65mm), 76mm & 3" (80mm)	Groove/ Groove	12½" (318mm)	34 lbs (15 kg)	Red
4" (100mm)	Groove/ Groove	14" (356mm)	64 lbs (29 kg	
	Flange/ Groove	16" (406mm)	79 lbs (36 kg)	
	Flange/ Flange	16" (406mm)	92 lbs (42 kg)	
6" (150mm)	Groove/ Groove	16" (406mm)	95 lbs (43 kg)	
	Flange/ Groove	19" (483mm)	122 lbs (56 kg)	
	Flange/ Flange	19" (483mm)	138 lbs (69 kg)	
165mm	Groove/Groove	16" (406mm)	95lbs (43kg)	
8" (200mm)	Groove/ Groove	$19^{3}/_{8}$" (492mm)	148 lbs (67 kg)	
	Flange/ Flange	21¼" (540mm)	197 lbs (90 kg)	

Trim Shipping Weight (Approx.) — **Table F**

Trim Configuration	2" (50 mm), 2½" (65 mm), 3" (80 mm), & 76 mm	4" (100 mm), 6" (150 mm), 8" (200 mm), & 165 mm
Wet Pilot Line Release	31 lbs (14 kg)	37 lbs (17 kg)
Dry Pilot Line Release	39 lbs (18 kg)	50 lbs (23 kg)
Electric Actuation Line Release	33 lbs (15 kg)	38 lbs (17 kg)

Friction Loss — **Table G**

Valve Size	Equivalent Length*		Cv (gpm to create 1 psi pressure loss)
	C = 120	C = 100	
2" (50mm)	4.4 ft (1,3 m)	3.1 ft (1,0 m)	101
2½" (65mm)	6.0 ft (1,8 m)	4.3 ft (1,3 m)	236
76mm	7.7 ft (2,3 m)	5.5 ft (1,7 m)	241
3" (80mm)	12.6 ft (3,8 m)	9.0 ft (2,7 m)	254
4" (100mm)	14 ft (4,3 m)	10 ft (3,0 m)	469
165mm	29.4 ft (9,0 m)	20.9 ft (6,4 m)	886
6" (150mm)	29.4 ft (9,0 m)	20.9 ft (6,4 m)	886
8" (200mm)	53.5 ft (16,3 m)	38.1 ft (11,6 m)	1516

***Note:** Expressed in equivalent length of Schedule 40 pipe, based on Hazen & Williams formula.

Wet Pilot Line Height vs. Length **Figure 4**

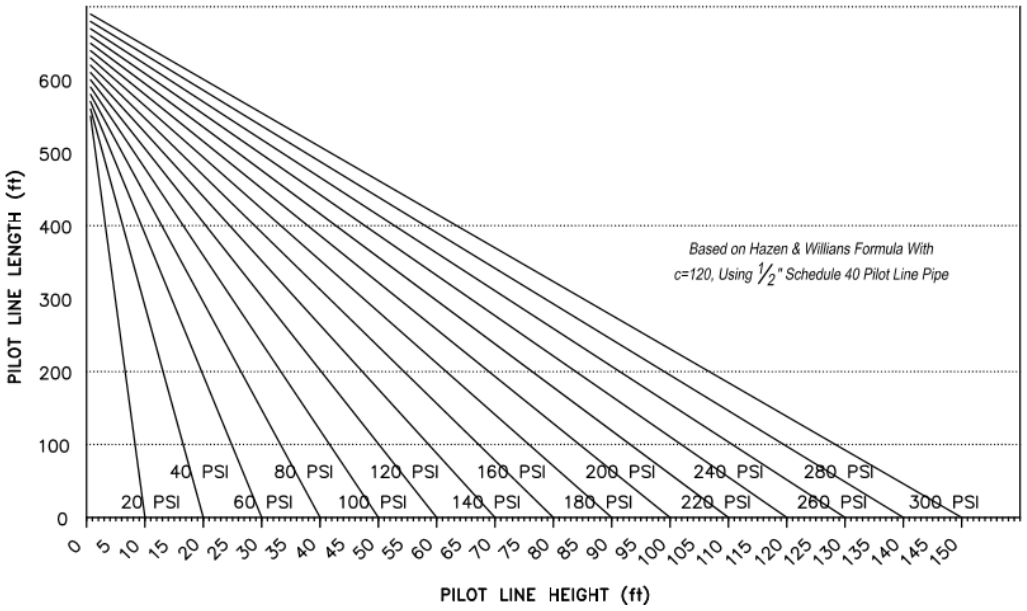

Model DDX Hydraulic Friction Loss Graph **Figure 5**

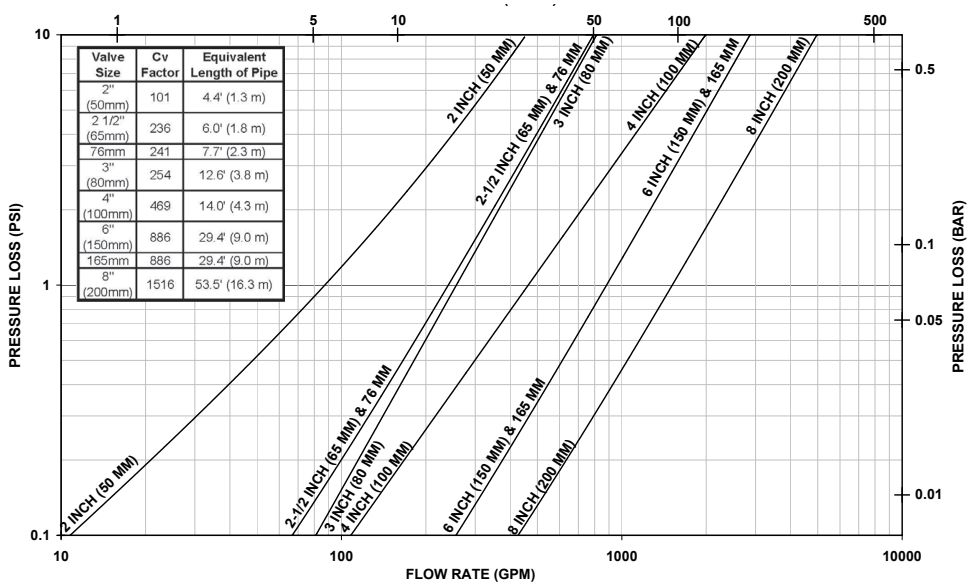

System Pneumatic Pressure **Table H**

Maximum Water Pressure psi (bar)	Minimum Air/Nitrogen Pressure psi (bar)
20 (1.4)	8 (0.6)[2]
30 (2.1)	10 (0.7)[2]
50 (3.4)	12 (0.8)[2]
75 (5.2)	13 (0.9)
100 (6.9)	15 (1.0)
125 (8.6)	16 (1.1)
150 (10.3)	17 (1.2)
175 (12.1)	18 (1.2)
200 (13.8)	19 (1.3)
225 (15.5)	21 (1.4)
250 (17.2)	22 (1.5)
275 (19.0)	23 (1.6)
300 (20.7)	24 (1.7)

Notes:
1. Pneumatic pressure less than the minimum specified will result in inadvertent operation of the system.
2. Pneumatic pressure higher than the minimum specified may result in delayed operation of the system.
Caution! Where the maximum water pressure is 20 psi (1.4 bar), 30 psi (2.1 bar) or 50 psi (3.4 bar) the maximum pneumatic pressure cannot exceed the 10 psi (.7 bar) 14 psi (1 bar) and 16 psi (1.1 bar) respectively. This may prohibit the use of a tank-less air compressor (see note 4).
3. The use of a listed pressure maintenance device such as the Reliable Model A or Model DD in conjunction with a tank-mounted air compressor or nitrogen generator incorporating a tank is highly recommended, even for single systems. (This is an NFPA 13 requirement for multiple systems fed from a common source.)
4. Where a tank-less compressor is used, the "start/on" setting of the pressure switch shall not be less than the minimum pneumatic pressure in the table. The "stop/off" pressure will be determined by the required differential of the compressor pressure switch.
5. During set-up, higher pneumatic pressure may temporarily be required to set the Model LP Actuator. Following set-up, lower the pneumatic pressure of the system to be in accordance with the table.
6. In no case should the pneumatic pressure exceed 30 psi (2.1 bar) to prevent damage to the actuator diaphragm.

LP Dry Pilot Actuator Characteristics **Table I**

Maximum Water Pressure psi (bar)	Nominal Trip Point psi (bar)
20 (1.4)	5 (0.36)
30 (2.1)	5 (0.36)
50 (3.4)	7 (0.51)
75 (5.2)	9 (0.63)
100 (6.9)	10 (0.72)
125 (8.6)	11 (0.78)
150 (10.3)	12 (0.83)
175 (12.1)	13 (0.9)
200 (13.8)	13 (0.9)
225 (15.5)	14 (1)
250 (17.2)	14 (1)
275 (19.0)	14 (1)
300 (20.7)	14 (1)

Note:
1. The Dry Pilot Actuator differential should be used as the "Dry Valve Differential" for valves using the Reliable Model LP Dry Pilot Actuator. Actual trip points may vary ± 2 psi due to the design of the actuator.

Special Instructions for Single Interlock Preaction Systems

Dry pilot line actuated single interlock preaction systems incorporate a pneumatic actuator that requires the supervisory pressure be set in accordance with Table H above based upon the water supply pressure.

Wet pilot line and electrically actuated single interlock preaction systems are designed to operate at 15 psi as noted herein. The supervisory pressure may be adjusted as desired, provided the resulting pressure is in accordance with NFPA 13.

Where changes are made to the supervisory pressure, Insure that the low/high alarm pressure switch is adjusted accordingly.

Model DDX Single Interlock Preaction System Components

Figure 6

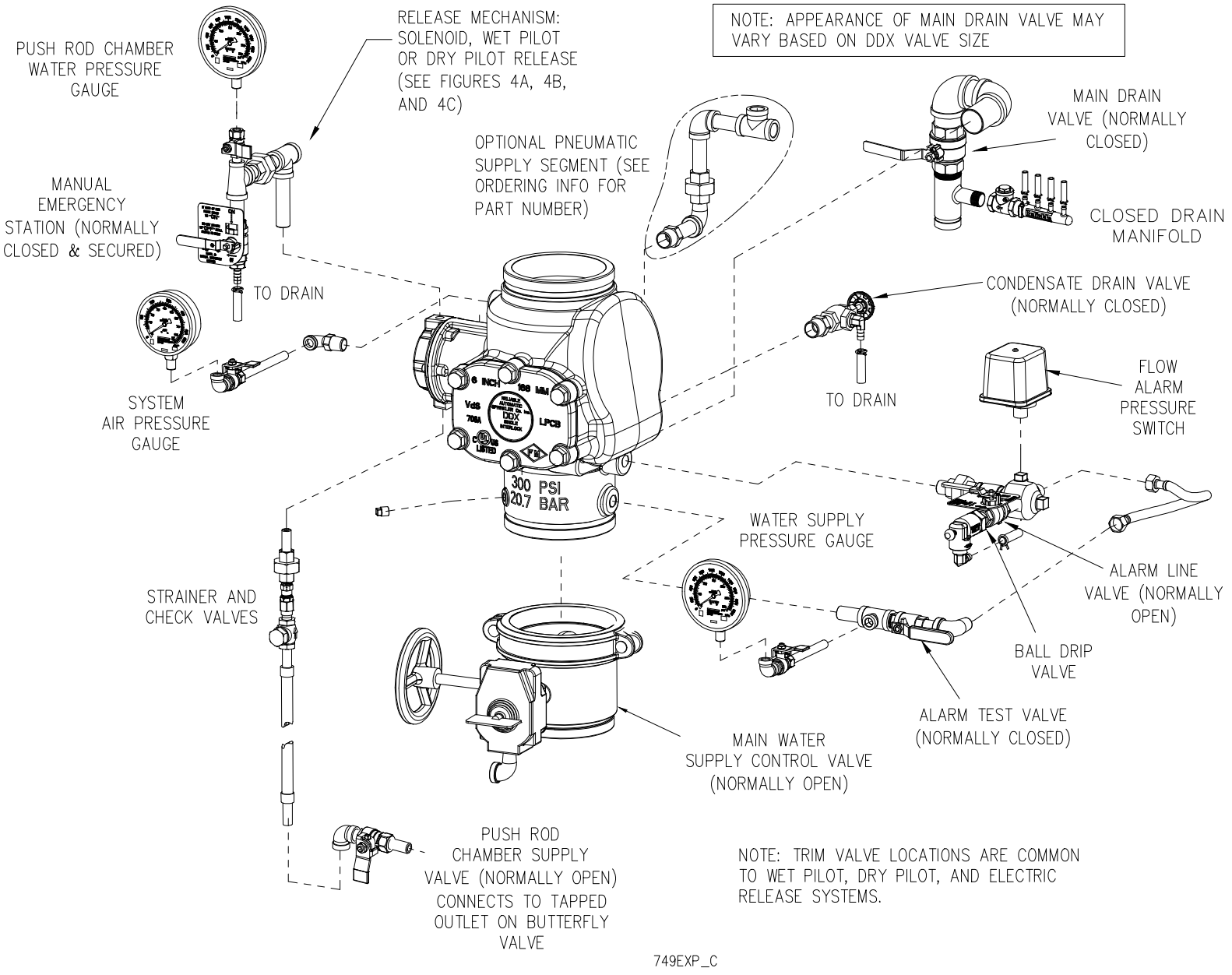

Wet Pilot Line Actuation

Figure 7A

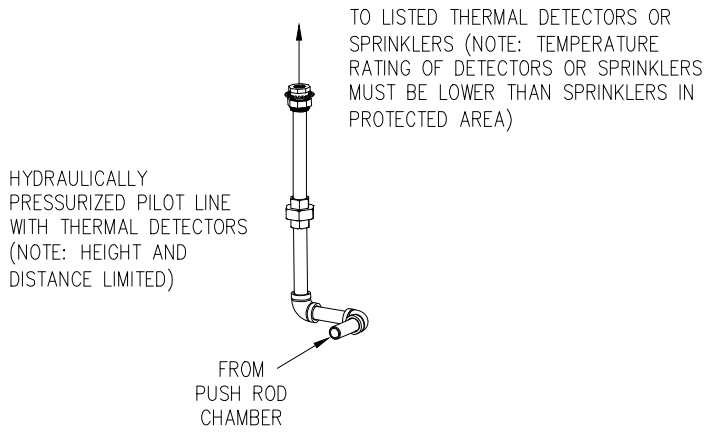

Dry Pilot Line Actuation

Figure 7B

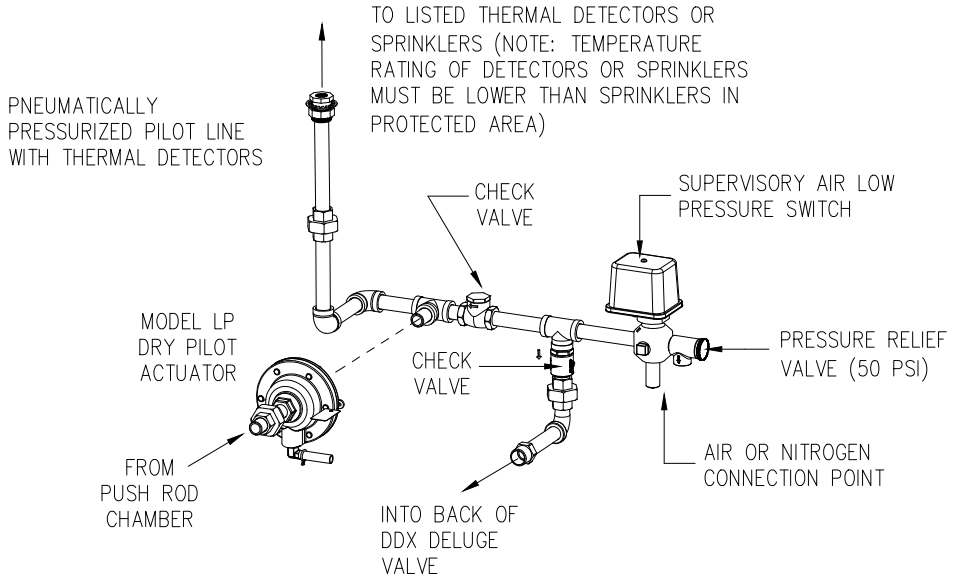

Electric (Solenoid) Actuation

Figure 7C

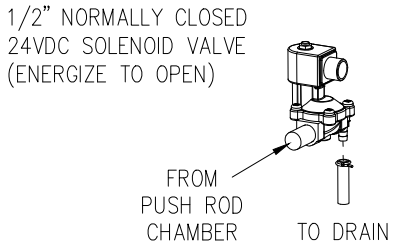

STANDARD SOLENOID VALVE:
PARKER-HANNIFIN MODEL 73218BN4UNLVNOC111C2
RATED WORKING PRESSURE 175 PSI (12.1 BAR)
VOLTAGE: 24VDC POWER: 10 WATTS
CURRENT: 0.41 AMPS HOLDING
COIL ENCLOSURE: NEMA 4X
PIPE SIZE: 1/2" NPT FEMALE
Cv FACTOR: 4.0

ALTERNATE SOLENOID VALVE:
PARKER-HANNIFIN MODEL 73212BN4TNLVNOC322C2
RATED WORKING PRESSURE 300 PSI (20.7 BAR)
VOLTAGE: 24VDC POWER: 22 WATTS
CURRENT: 0.83 AMPS HOLDING
COIL ENCLOSURE: NEMA 4X
PIPE SIZE: 1/2" NPT FEMALE
Cv FACTOR: 2.8

Installation

1. The Model DDX valve shall be installed, maintained, and tested in accordance with NFPA13, "Standard for the Installation of Sprinkler Systems," as well as the requirements of any authorities having jurisdiction. Failure to follow installation instructions may void the warranty and/or listing of the system.
2. The Model DDX valve must only be installed in the vertical position with water moving up and through the valve.
3. Verify compatibility of the Model DDX materials with the water supply and the environment where the valve will be installed prior to installation.
4. The Model DDX valve must be installed in a location where the temperature is maintained at a minimum of 40°F (4°C). Heat tracing of the valve and/or trim is not permitted.
5. The Model DDX valve must not be installed in a location where the ambient and/or the water temperature exceeds 140°F (60°C).
6. Unauthorized revisions to the trim arrangement of the valve may void the warranty and/or listing of the system.
7. Design and installation of detection and release systems, when required, must be performed in accordance with applicable NFPA standards and the authority having jurisdiction.
8. Drains should be piped to a location that will avoid damage to property and/or injury to personnel.
9. Whenever ambient temperature conditions are high, the water temperature in the Model DDX-LP Deluge Valve System pushrod chamber may rise, thereby increasing the pressure in the chamber to values exceeding the rated pressure of the system. Where normal temperature and pressure is exceeded, a pressure relief kit (P/N 6503050001; ordered separately) can be installed to limit pushrod chamber hydraulic pressure.
10. Please refer to Technical Bulletin 520 for additional information on the setup, inspection, testing, and maintenance of Model DDX systems.

Listings and Approvals

(Only when used with Reliable Trim Sets)

1. Listed by Underwriters Laboratories, Inc. and UL certified for Canada.
2. Certified by FM Approvals (FM).
3. Loss Prevention Certification Board (LPCB) [4" (100mm), 6" (150mm), and 8" (200mm) sizes only]
4. VdS Schadenverhütung GmbH (VdS)

Guarantee

For Reliable Automatic Sprinkler Co., Inc. guarantee, terms, and conditions, visit www.reliablesprinkler.com.

Ordering Information

Specify:

Valve Model: DDX Single Interlock Preaction

Valve Size: [2" (50mm)] [2-1/2" (65mm)] [76mm] [3" (80mm)] [4" (100mm)] [6" (150mm)] [165mm] [8" (200mm)]

End Connection Configuration (see Table A): [Groove/Groove] [Flange/Groove] [Flange/Flange]

Note: 2", 2-1/2", 3", and 76mm valves are available only with grooved ends.

Operational Trim: [Wet-Pilot Release] [Dry-Pilot Release] [Electric Release 175psi (12,1 bar)] [Electric Release 300psi (20,7 bar)]

Trim Configuration: [Loose Trim] [Segmentally Assembled Trim] [Fully Assembled Trim w/o Water Supply Control Valve] [Fully Assembled w/ Water Supply Control Valve]

Water Pressure Gauges: 0-300 psi (20,7 bar) or 0-600 psi (41,4 bar)

Optional Equipment

Pushrod Chamber Pressure Relief Kit: P/N 6503050001

Pneumatic Supply Trim: [Without Pressure Switch, PN 6501200056] [With PS15 Pressure Switch, PN 6501200057]

Streamline™ Flexible Drain Hose: Please see Technical Bulletin 442

Service Kits

Service kits are available for routine servicing of the valve (reference Assembly Drawings on website). Service kits for the Model DDX Deluge Valve include the following components:

- Clapper Seal Assembly (item 8)
- Cover Gasket (item 9)
- Bumpstop(s) (item 10)
- Push rod chamber diaphragm (item 18)
- Grease (item 42)

2", 2-1/2", and 3" Model DDX Service Kit: PN 6501200R03
4" Model DDX Service Kit: PN 6501200R04
6" Model DDX Service Kit: PN 6501200R05
8" Model DDX Service Kit: PN 6501200R06

P/N 9999970440