Bulletin 426 April 2026

Model MP LL (Multi-Purpose) 1” Residential Riser

Specifically Listed and Certified for Providing Water - Flow Alarm on Multipurpose Residential Fire Sprinkler Systems that serve both Domestic Water and Fire Protection.

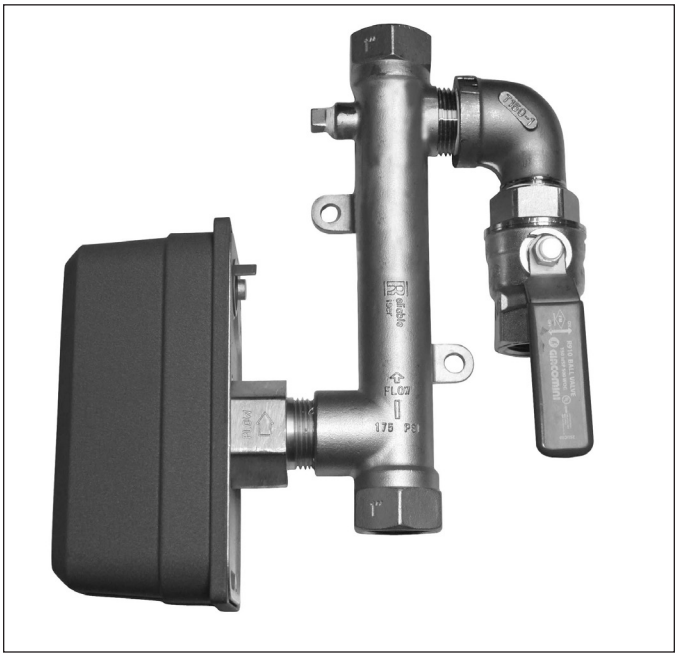

Fig. 1

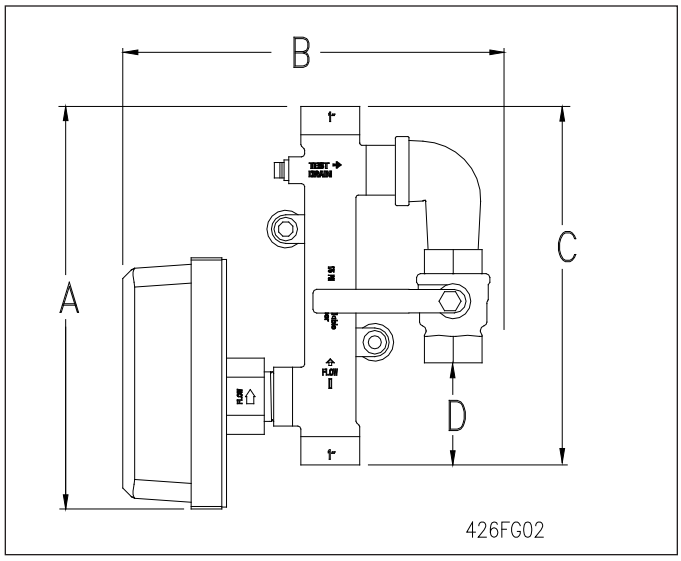

Fig. 2

Features

1. Designed to alarm on single fire sprinkler operation and not during normal household water usage.
2. cULus Certified to NSF/ANSI Standard 61 ANNEX G.
3. Water-flow Detector is preset to operate at 12 gpm ± 1 gpm (45.4 Lpm ± 3.8 Lpm), and is factory installed with a weather–proof metal cover.
4. Dedicated cULus Listed water-flow detector assures optimum sensitivity while the adjustable delay device minimizes false alarms caused by pressure surges or short periods of water usage above 12 gpm.
5. Switch can be wired for 24 VDC or 125/250 VAC operation.
6. Stainless steel 1” (25mm) manifold with NPT or Metric Inlet and Outlet Threads.
7. Factory assembled and tested.
8. Rated working pressure not to exceed 175 psi.
9. UL Listed Assembly.
10. When the Model MP LL Riser is utilized in sprinkler systems with sprinklers having K-factors less than 4.4, there must be a minimum of 15 psi of operating pressure at the system’s most remote sprinkler.

Listings & Approvals

1. cULus Listed Flow Test Assembly to ANSI/UL 346.
2. cULus Certified for Health Effects to NSF/ANSI/CAN 600.
3. cULus Certified less than 0.25% lead content to NSF/ANSI 372 Annex G (formerly NSF 61 Annex G).

Product Description

The Multi-Purpose-Riser comes factory assembled with the necessary accessories for a cost effective, complete riser assembly.

Cast-on lettering identifies manifold size and flow direction. This Riser can be used safely where domestic water and fire protection water are combined.

The water flow detector range, preset to 12 gpm ± 1 gpm, is designed to protect the system from false tripping when multiple household fixtures are in use. When the Model MP Riser is utilized in sprinkler systems with sprinklers having K-factors less than 4.4, there must be a minimum of 15 psi of operating pressure at the system’s most remote sprinkler.

Technical Data:

Description	Multi Purpose Riser Trim				
Manifold Size:	Dimensions inch (mm)				Weight*
	A	B	C	D	Lbs (kg)
1” (25mm)	11 (280)	10 (254)	9.5 (241)	2.75 (70)	5.7 (2.1)

* Support Bracket Kit (optional) - 1 lb (0.45 kg)

Installation:

1. Install the manifold with the flow arrow pointing towards the SYSTEM side using 1” NPT threaded connections. Use potable water - safe thread sealants only (Teflon tape is recommended).
2. Connect 1” Brass Ball Valve to drain.
3. Place the sprinkler system in service.
4. Follow directions on the water-flow detector switch for electrical connections.

Caution:

Automatic sprinkler systems having non-fire protection connection flows (permitting continual water flow) require dielectric fittings, according to NFPA 13 sect. 4-6, when dissimilar metal piping materials are joined.

Ordering Information:

Specify

1. Model MP LL 1” (25mm) Residential Riser.
2. NPT (P/N 6501200125) or Metric (P/N 6501200126) Threads for Inlet and Outlet.
3. Support Bracket Kit (P/N 6899190001), if required.

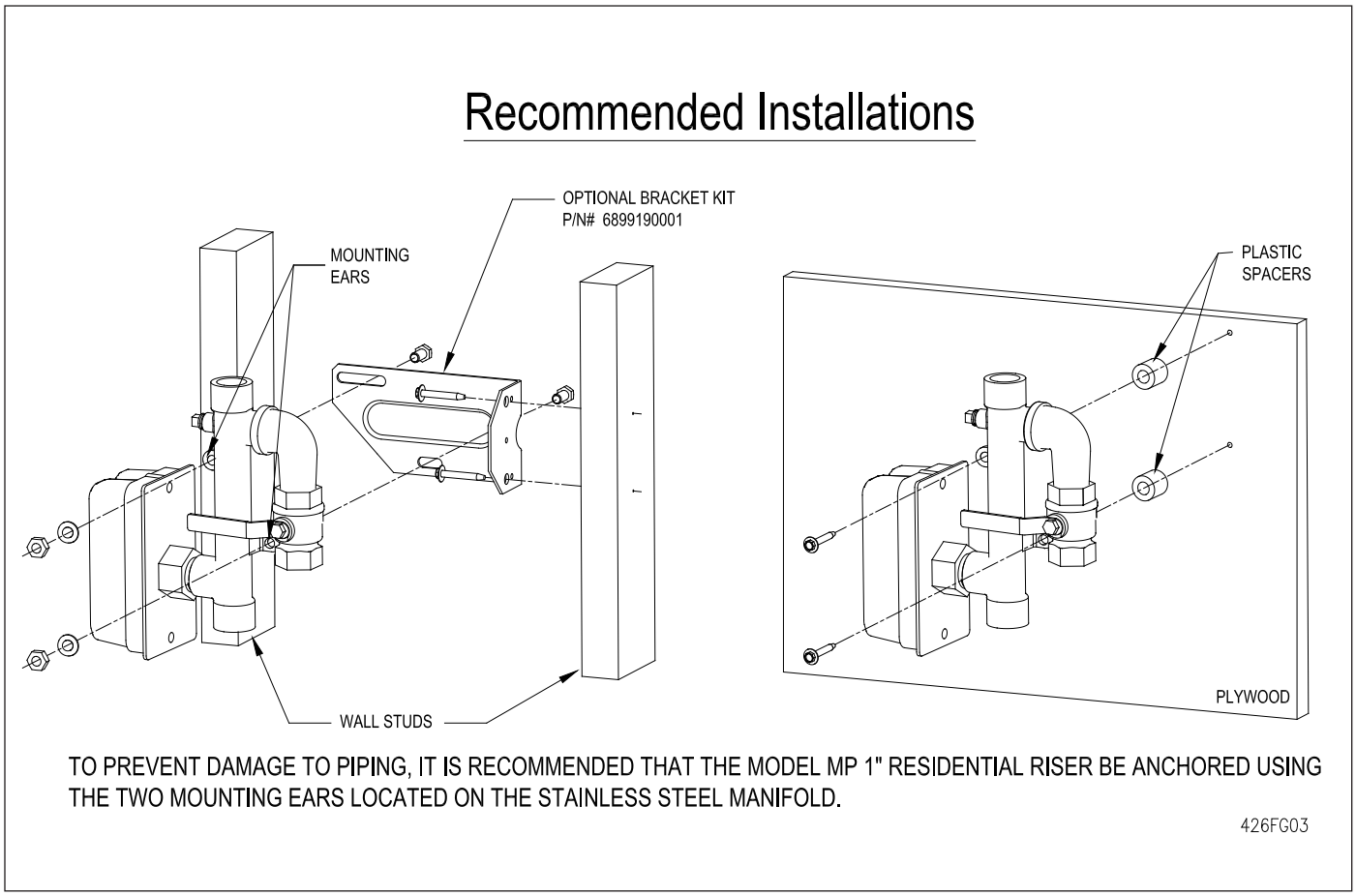

Fig. 3

The equipment presented in this bulletin is to be installed in accordance with the latest published Standards of the National Fire Protection Association, Factory Mutual Research Corporation, or other similar organizations and also with the provisions of governmental codes or ordinances whenever applicable.
Products manufactured and distributed by Reliable have been protecting life and property for almost 100 years.

Manufactured by

Reliable®

Reliable Automatic Sprinkler Co., Inc.
(800)431–1588 Sales Offices
(800)848–6051 Sales Fax
(914)829–2042 Corporate Offices
www.reliablesprinkler.com Internet Address

Recycled Paper

Revision lines indicate updated or new data

EG. Printed in U.S.A. 04/26 P/N 9999970416